MODULAR MOLD SYSTEMS

Catalog Rev. 05

Terms and Conditions

Thank You for considering the Modular Mold Systems

How to Order:
All Modular Mold Systems items listed in your catalog carry a catalog number as well as a price. Please use the catalog number as well as the name of the item when ordering. This will speed your order entry as well as reduce the opportunity for error. For your convenience, phone orders will be accepted Monday through Thursday 8:00AM to 5:00PM EST., Friday, 8:00AM to 4:30PM EST. Fax system online 24 hours a day.

Voice: 419-675-3334
800-860-3974 (in the United States)
Fax: 419-675-0557
Email: info@modularmoldsystems.com

Terms:
Net 30 days with approved credit. A standard credit form must be completed and returned before credit will be extended. Visa and Master Card credit card orders are accepted. A 50% deposit may be required on special or custom orders. C.O.D. orders may be accepted. Past due accounts will be charged monthly the current maximum percentage allowed by law. All International orders must be pre-paid by CC or wire transfer.

Freight:
F.O.B. Kenton, OH unless other arrangements have been made prior to shipping.

Prices:
Prices are F.O.B. point of origin. Any taxes are in addition to the price and may be invoiced later.

Shipping Schedule:
The shipping schedule is our current estimate of delivery and we agree to use reasonable efforts to comply with the schedule. Buyer's acceptance of delivery of our products from the carrier shall constitute a waiver of any claims for delay.

Warranty:
Any product or part thereof which, under normal operating conditions in the plant of the buyer thereof, proves defective in material or workmanship, as determined by our inspection, within 12 months from date of shipment will be replaced or repaired free of charge.

This warranty is contingent upon the following conditions: that we promptly receive notice of the defect, that the buyer established that the product has been properly installed, maintained, and operated within the limits of related and normal usage as specified by us, and that, upon our request, buyer will return to us at our expense the defective product or part thereof.

The terms of this warranty do not in any way extend to any product of part thereof which has a live, under normal usage, inherently shorter that 12 months, or to equipment, tooling or machinery which were not manufactured in which event we shall use reasonable efforts to pass to the buyer the manufacturer's warranty.

The conditions of the actual production in each end user's plant vary considerably. Therefore, description of the production or performance capability of any product is estimates only and is not warranted.

Any services or part provided by us which are outside the scope of the warranties shall be charged to buyer at our applicable time and material rate and terms and conditions in effect at the time such service or parts are provided.

Exclusions of Warranties:
The warranties to repair or replace defective products or parts as set forth in paragraph 3, and any additional warranty expressly stated to be a warranty and set forth in writing as part of these terms herein are in lieu of all other warranties, expressed or implied, including but not limited to, any implied warranty of merchantability or fitness for a particular purpose.

Limitation of Remedies and Liabilities:
Buyer agrees that our liability and buyer's sole exclusive remedy pursuant to any claim of any kind including but not limited to a claim in contract, negligence or strict liability, against us or any of our affiliates, shall be (a) the repair or replacement at our option of defective products or parts thereof or (b) a refund of the price allocable to the defective product or part thereof. Claims of any kind include but are not limited to those for any loss or damage arising out of, connected with, or resulting from this agreement or from the performance or breach of the terms thereof, or from the design, manufacturer, sale, delivery, resale, installation, technical direction of installation, inspection, repair, operation or use of any product or part thereof covered by this agreement. If however any warranty is expressly set forth in writing in accordance with the Shipping Schedule as part of these terms in addition to those set forth in the Shipping Schedule, our affiliates under such additional warranty shall terminate one year from date of shipment by us.

Under no circumstances shall we or any affiliate of ours have any liability whatsoever for incidental or consequential damages, such as, but not limited to, loss of profit or revenue; loss of use of the product, part thereof, or software materials; cost of capital; cost of replacement equipment; or claims resulting from contracts between buyer, its customers and/or suppliers. Unless expressly provided for herein, in no event shall we or any affiliate of ours assume responsibility or liability for (a) penalties, penalty clauses, or liquidated damage clauses of any description, (b) certifications or (c) identification of buyer or other costs, damages or expenses arising out of or related to the product or part thereof.

Terms and Conditions

Cancellations:
Unless otherwise agreed, buyer may cancel all or part of the order by written notice received by us no later than 120 days before the acknowledged shipping date or (in the case of cancellation of only part of an order) 120 days before our completion of that part of the order. On receipt of such cancellation notice, all work on the order or part thereof will be stopped as promptly as is reasonably possible. Buyer will then be invoiced for and will pay to us, as liquidated damages, a cancellation charge. For completed items, the charge will be equal to 120% of our full cost as determined by us in accordance with our standard accounting practices, plus a charge for any packing and storage, less a credit for the balance of the material as scrap. Full cost includes burden and overhead cost incurred by us or by any of our affiliates.

Payment Terms:
Payment is due in accordance with any applicable progress, advance or other agreed upon payment schedule, or, if no such schedule has been agreed to, upon acceptance as specified in the Acceptance of Product paragraph, but in no event later than 30 days from date to invoice. No cash discount is provided. If in our judgement, buyer's financial condition changes, we may stop work until financial arrangements satisfactory to us are made.

Acceptance of Product:
Before accepting any product covered by buyer's order, buyer shall have a final opportunity to inspect it immediately after delivery, installation, or any scheduled demonstration of the product by us, whichever is later. Each such product shall be deemed to be accepted 14 days thereafter, unless we receive written notification of rejection for cause from buyer within 14 days.

Risk of Loss:
Possession and risk of loss of each item of equipment shall pass to buyer upon delivery of such items to buyer'' designated carrier, consigned to buyer or buyer may direct.

Title:
Title of each item of equipment passes to buyer when it has been delivered to buyer's designated carrier at our place of business in Kenton, OH.

Force Majeure:
We shall not be liable for any delay in performance or non performance which is due to war fire, flood, acts of God, acts of third parties, acts of government authority or any agency or commission thereof, accident, breakdown of equipment, difference with employees or similar or dissimilar causes beyond our reasonable control, including but not limited to, those interfering with production, supply or transportation of products, raw material or components or reasonable, material, labor, equipment or transportation.

Acceptance of Orders:
Buyer agrees that all orders, including any arising from our proposal, shall include these terms and conditions only, not withstanding any different or additional terms that may be embodied in buyer's order. All orders are subject to acceptance by us in writing.

Order Return Policy:
Any buyer's order returned to Pleasant Precision, Inc. for stocking will be charged a restocking fee equal to 15% of the purchase price. Any returned order must be received by Modular Mold Systems within 30 days of original purchase date. Returned items must be received in "As New" condition, undamaged.

Merger Clause:
This agreement entirely supersedes any prior oral representations, correspondence, proposal, quotation, or agreement. This writing constitutes the final and total expression of such agreement between the parties, and it is a complete and exclusive statement of the terms of that agreement.

Assignment:
Neither party may assign the agreement without the written consent of the other party.

Governing Law:
This agreement shall be governed by and construed in accordance with the laws of the State of Ohio.

MODULAR MOLD SYSTEMS

Section Two

Round Mate Interchangeable Systems

Round Mate Micro Series

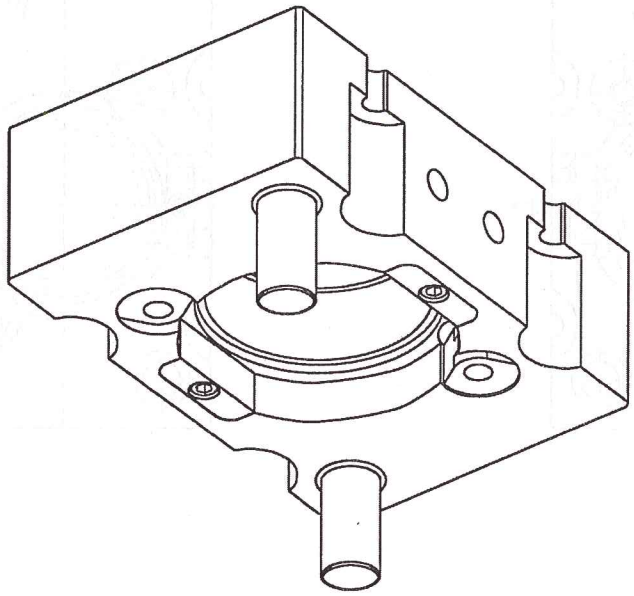

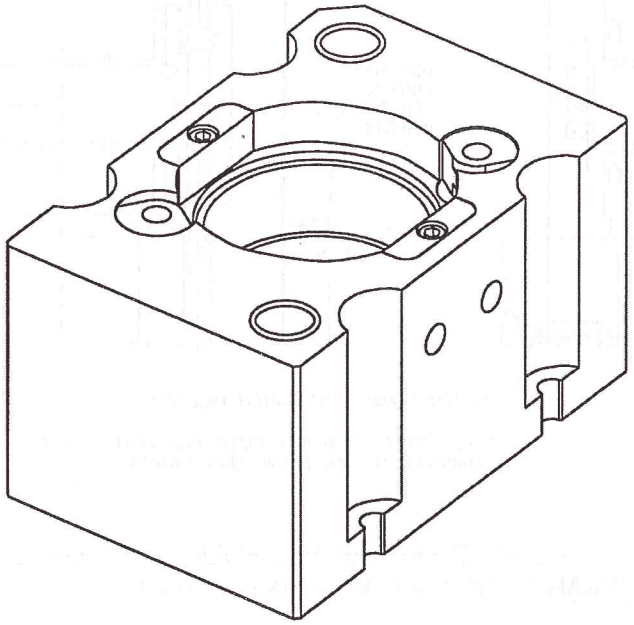

3" ROUND MATE®

Micro Master Frame

DESIGNED FOR USE IN
NISSEI HM-7 MOLDER

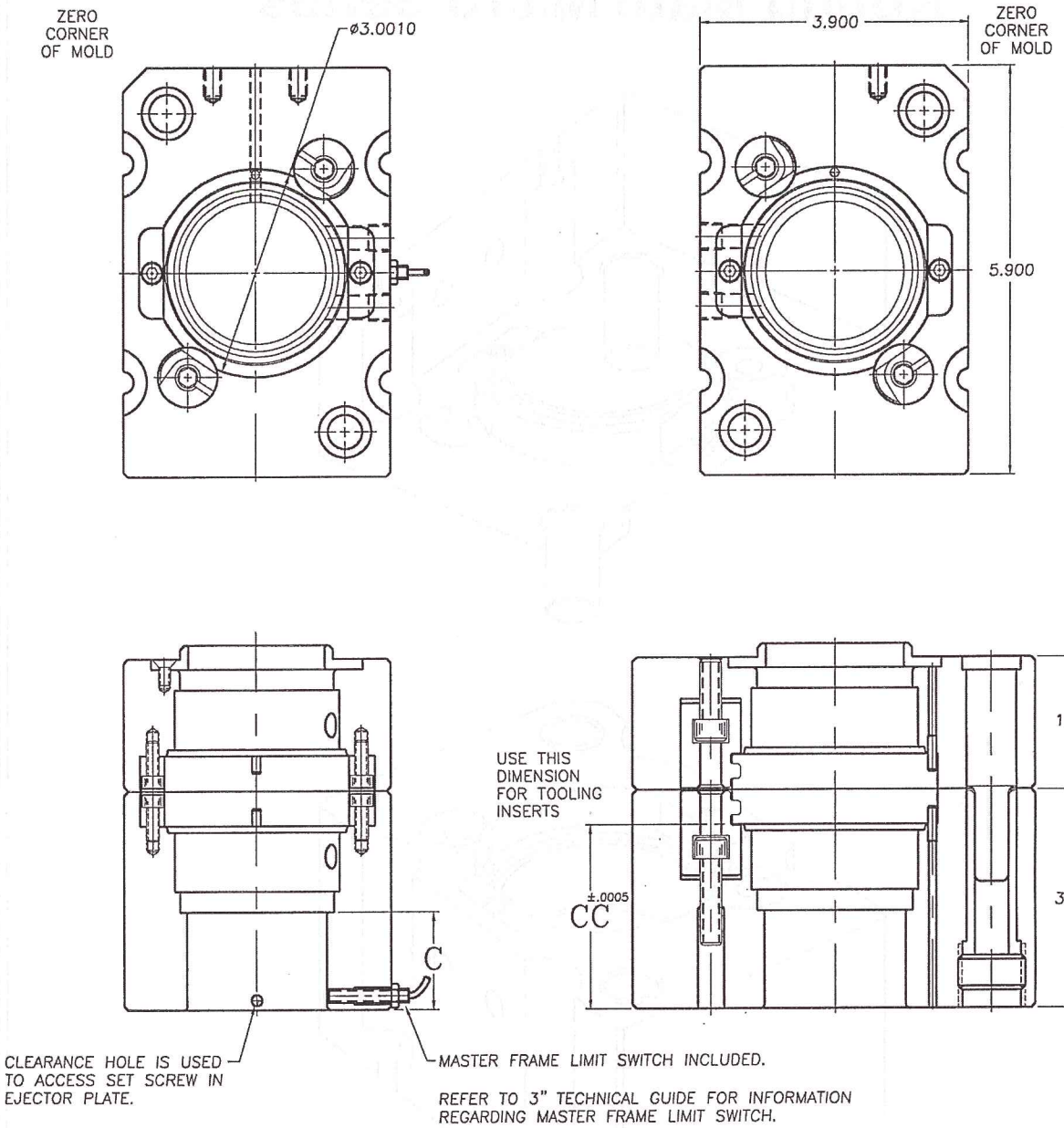

MICRO SERIES MASTER FRAME (FOR NISSEI HM-7 APPLICATIONS ONLY)

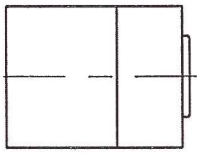

STYLE #	C	CC	H
RMF-0311	1.400	2.6500	5.050

www.modularmoldsystems.com Phone: 800-860-3974 419-675-3334 Fax: 419-675-3283

3" ROUND MATE®

Micro Components

MODULAR MOLD SYSTEMS

LOCATING RING

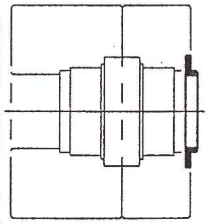

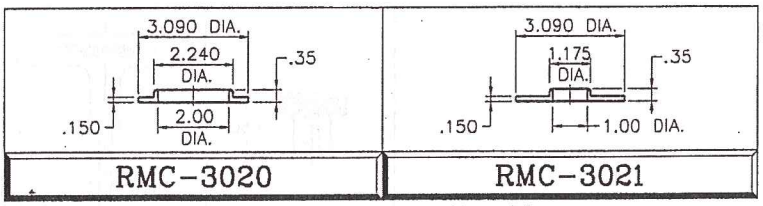

RMC-3020	RMC-3021
HOT BUSHING MODEL (REQUIRES PLATEN MODIFICATION)	STANDARD MODEL

MAT'L 4140

PLATEN INSERT

FOR BETTER UTILIZATION OF THE ROUND MATE MASTER FRAME, A PLATEN INSERT CAN BE ADAPTED TO THE STATIONARY PLATEN. MODIFICATION OF THE MACHINE PLATEN IS NECESSARY.

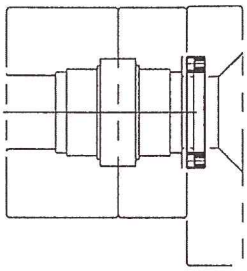

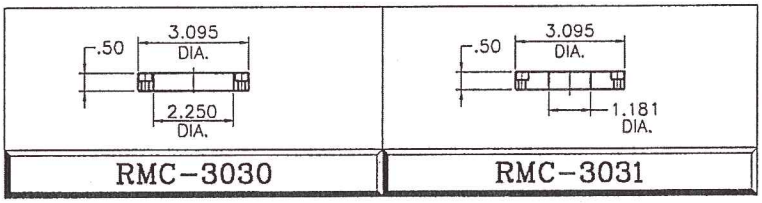

RMC-3030	RMC-3031

RMC-3030: USED WITH LOCATING RING #RMC-3020 WHEN MORE CLEARANCE IS REQUIRED FOR A HOT BUSHING OR HOT TIP & WIRING.

RMC-3031: USED WHEN RETURNING TO STANDARD LOCATING RING #RMC-3021.

MAT'L 4140

MOLD CLAMP

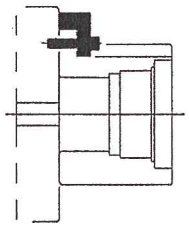

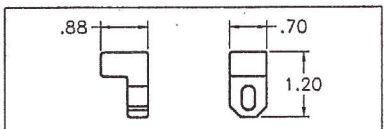

INCLUDES M6 X 30mm SHCS

RMC-3160

PACKAGE OF 4 MAT'L 4140

KNOCK-OUT BOLT

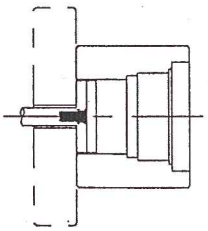

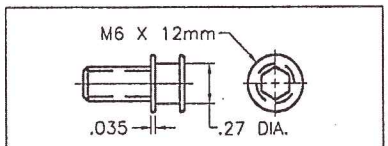

RMC-3170

PACKAGE OF 5

RETAINER/LIFTER – EJECTOR RETAINER WRENCH

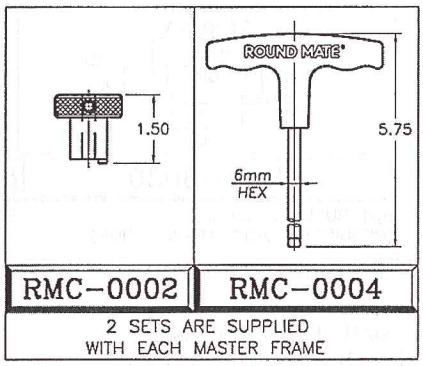

Notes:

4" ROUND MATE®

Micro Master Frame

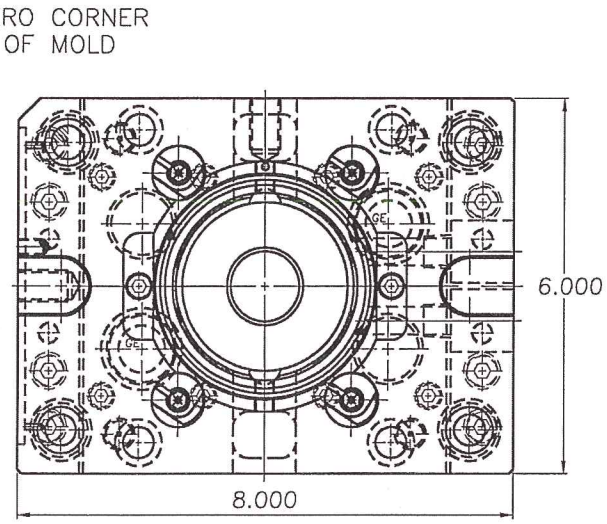

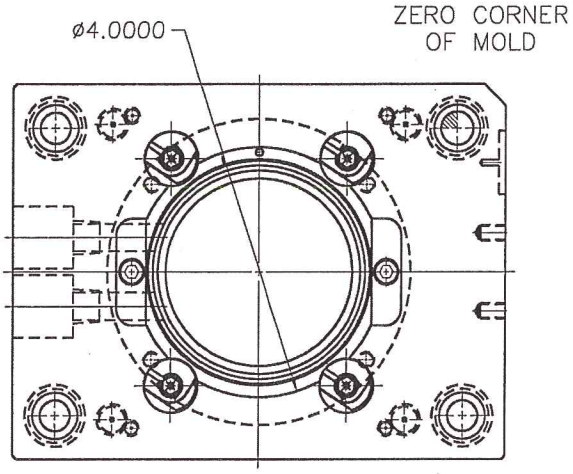

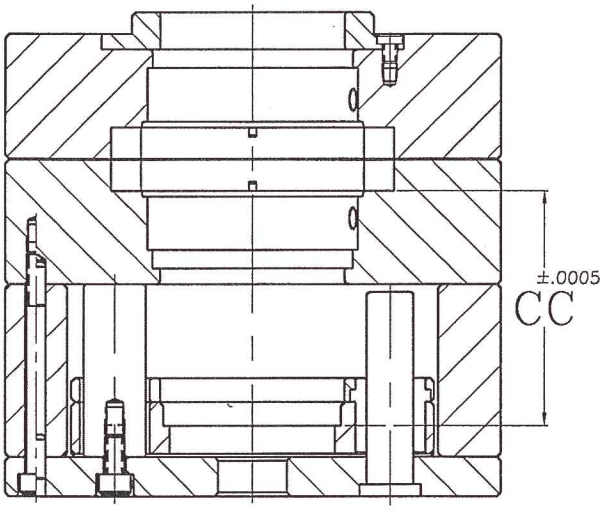

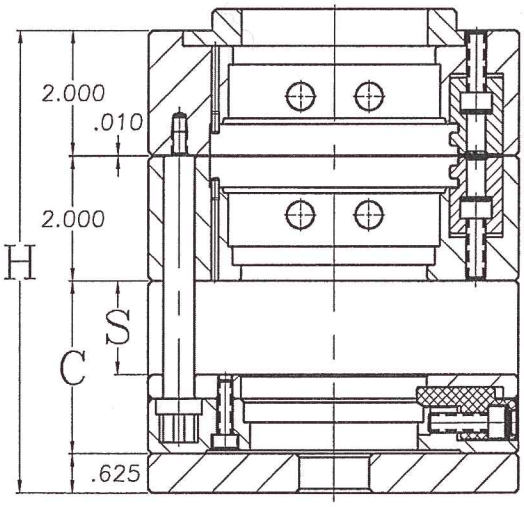

MICRO SERIES MASTER FRAME

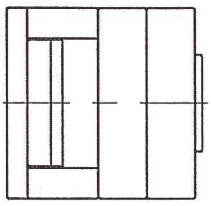

STYLE #	C	CC	H	S
MSF-0413	2.75	3.7500	7.385	1.500

www.modularmoldsystems.com Phone: 800-860-3974 419-675-3334 Fax: 419-675-3283

4" ROUND MATE®
Micro Components

MODULAR MOLD SYSTEMS

LOCATING RING

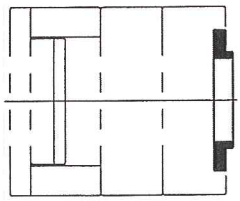

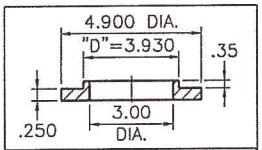

MSC-4020

MOUNTING SCREWS INCLUDED
MAT'L 4140

RETAINER/LIFTER – EJECTOR RETAINER WRENCH

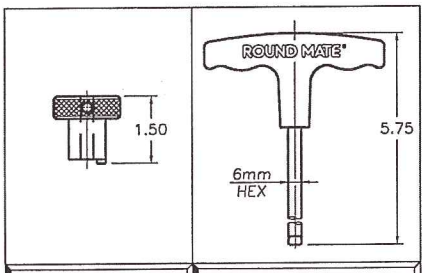

RMC-0002	RMC-0006

2 SETS ARE SUPPLIED
WITH EACH MASTER FRAME

Notes:

4" Round Mate

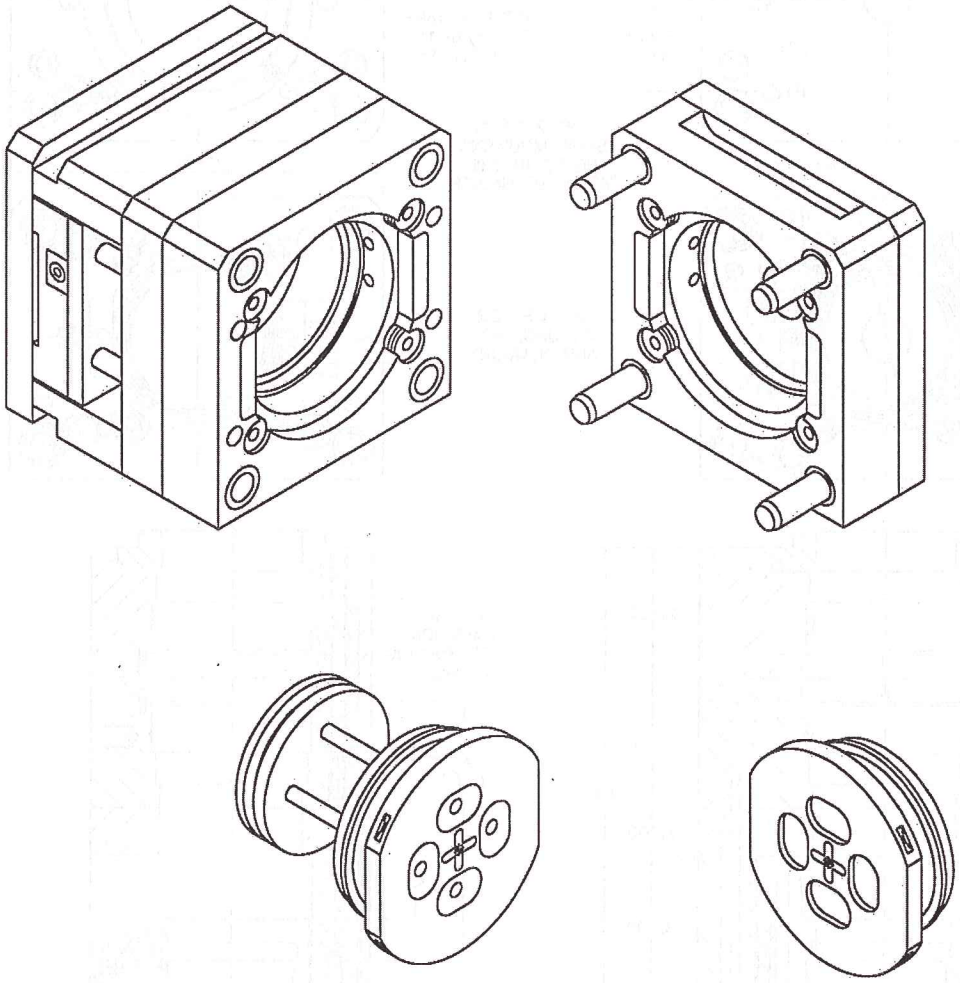

4" ROUND MATE®

Standard Master Frame

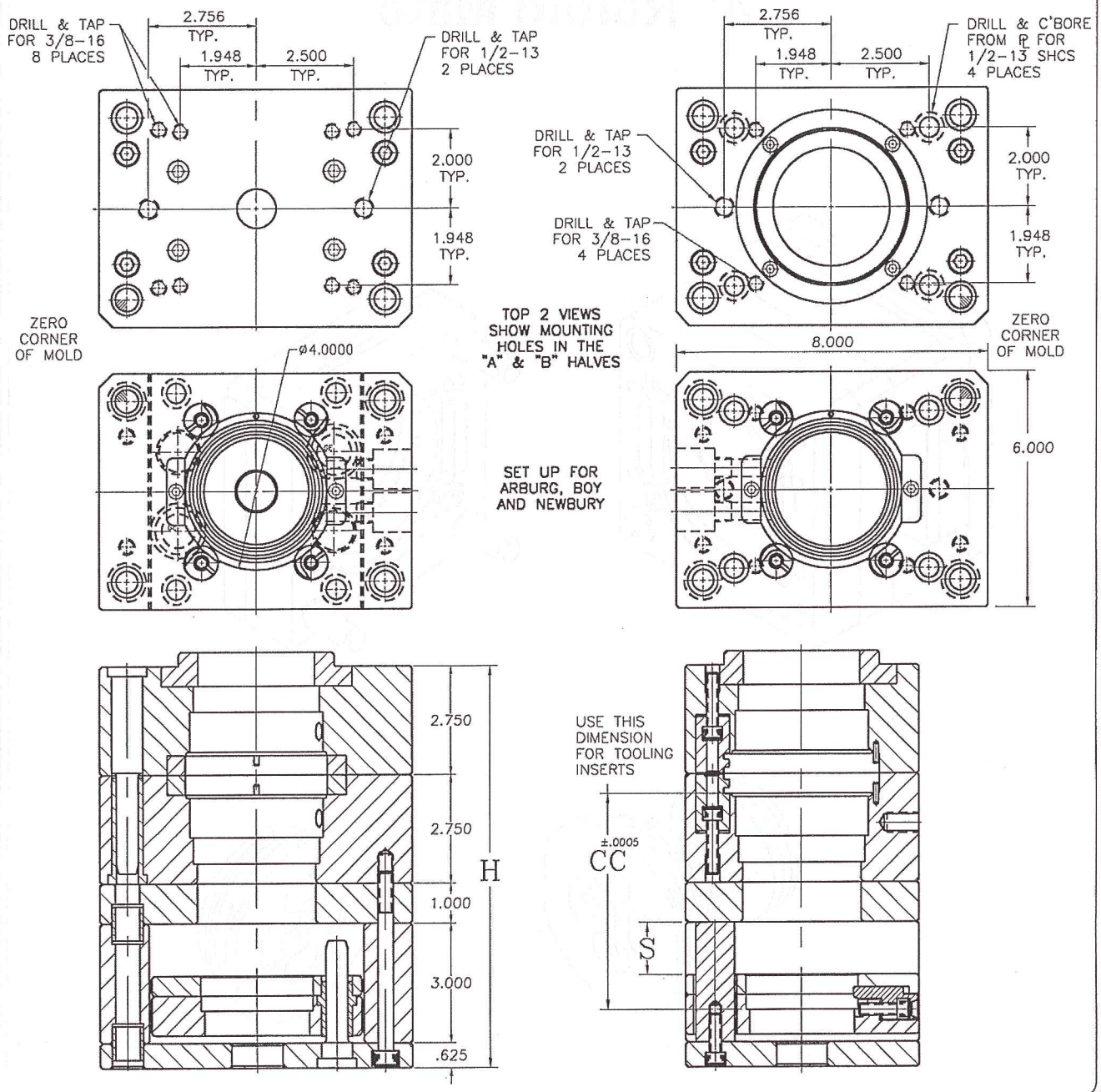

STANDARD MASTER FRAME

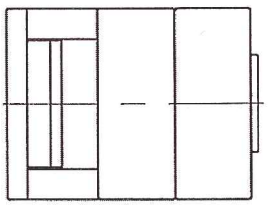

STYLE #	C	CC	H	S
RMF-0413	3.00	5.4375	10.125	1.312

www.modularmoldsystems.com Phone: 800-860-3974 419-675-3334 Fax: 419-675-3283

4" ROUND MATE®

Standard Components

MODULAR MOLD SYSTEMS

LOCATING RING

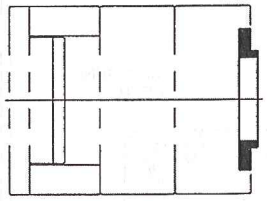

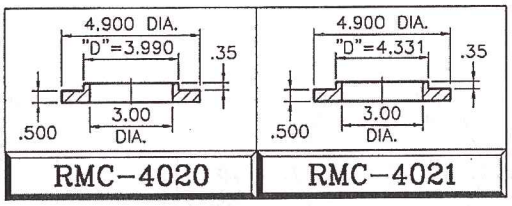

MOUNTING SCREWS INCLUDED MAT'L 4140

RETAINER/LIFTER – EJECTOR RETAINER WRENCH

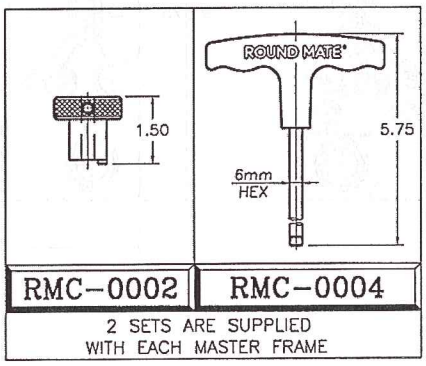

4" ROUND MATE®

EX2 Master Frame

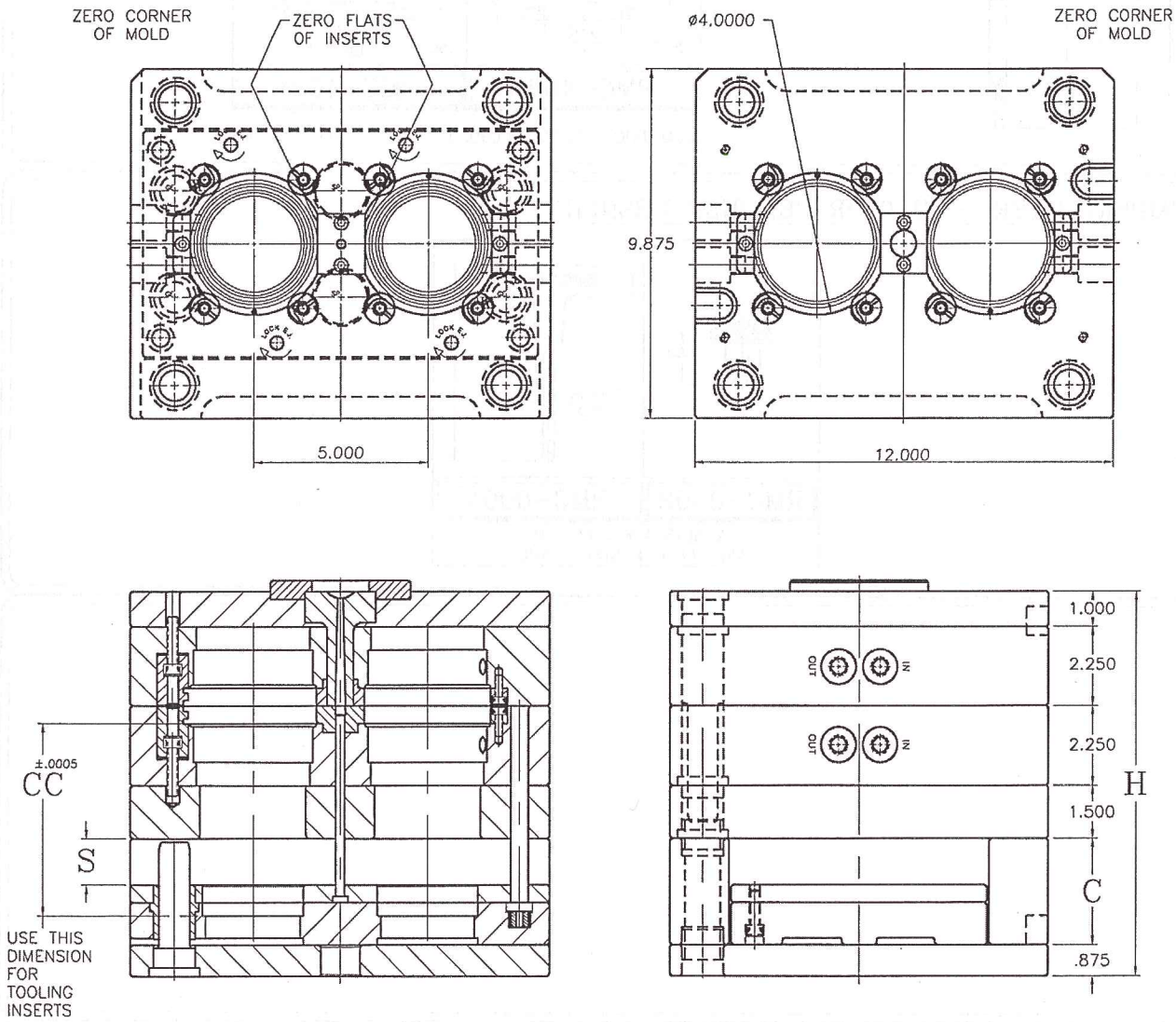

MULTI-POSITION MASTER FRAMES ARE SUPPLIED WITH SPI STANDARD KNOCKOUT LOCATIONS. NON-STANDARD KNOCKOUT LOCATIONS WILL BE QUOTED UPON REQUEST.

WHEN ORDERING A MULTI-POSITION MASTER FRAME PLEASE SPECIFY: RUNNER SIZE; RUNNER BLOCK HEIGHT; SPRUE BUSHING "R" & "O" DIM.; LOCATING RING TYP

STANDARD TWO POSITION MASTER FRAME

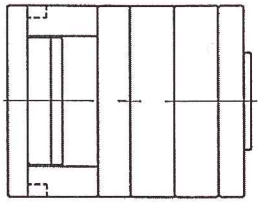

STYLE #	C	CC	H	S
RMF-0423	3	5.4375	10.875	1.312
RMF-0424	4	6.4375	11.875	2.312
RMF-0425	5	7.4375	12.875	3.312

4" ROUND MATE®

EX2 Components

MODULAR MOLD SYSTEMS

INSULATOR BOARD

OPTIONAL

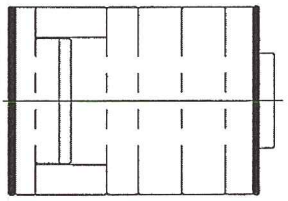

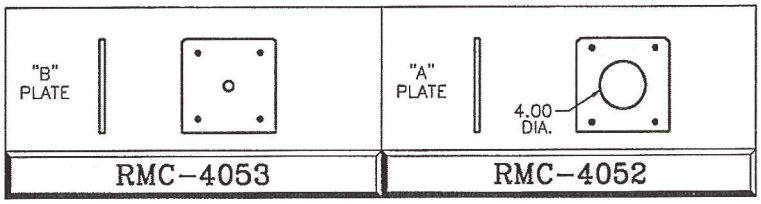

RMC-4053	RMC-4052

EXTENDED LOCATING RING

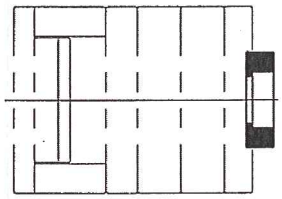

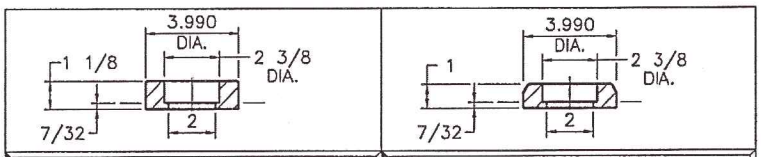

RMC-0073	RMC-0071

USED WITH INSULATOR BOARD

LOCATING RING

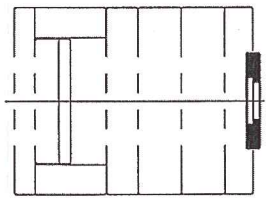

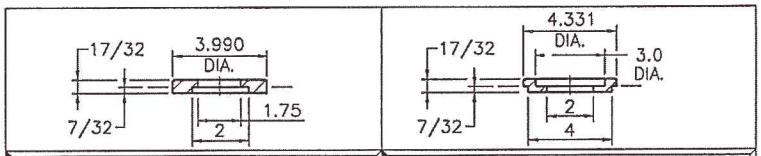

RMC-0070	RMC-0072

RETAINER/LIFTER

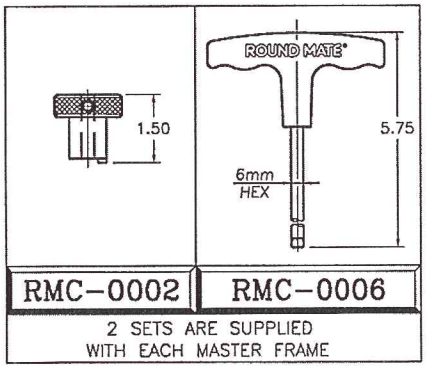

RMC-0002	RMC-0006

2 SETS ARE SUPPLIED WITH EACH MASTER FRAME

EJECTOR RETAINER WRENCH

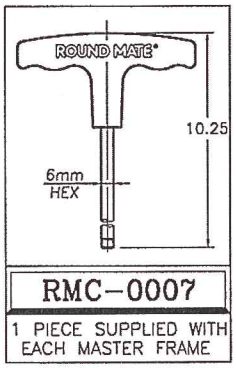

RMC-0007

1 PIECE SUPPLIED WITH EACH MASTER FRAME

MODULAR MOLD SYSTEMS

Notes:

6” Round Mate

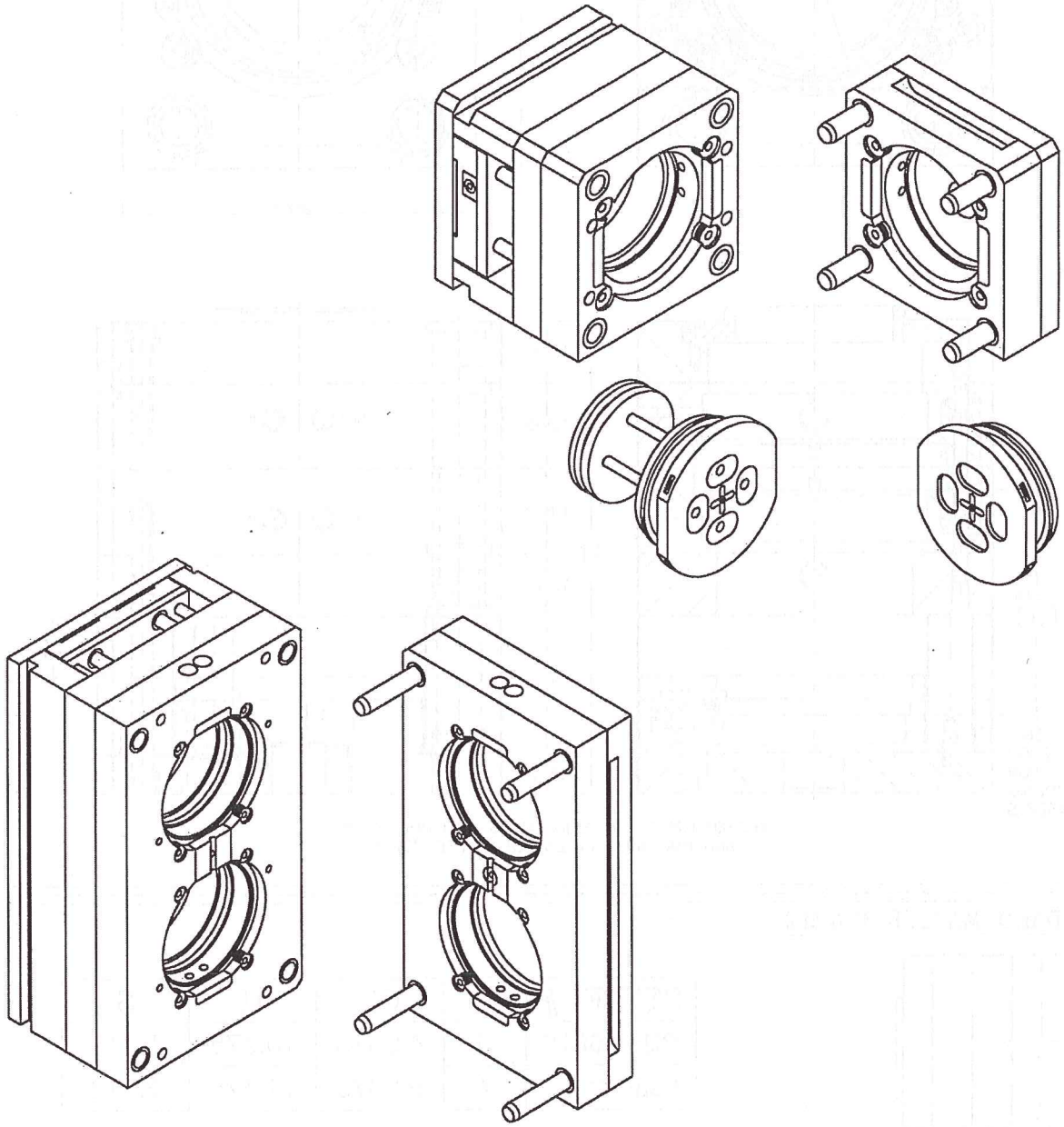

6" ROUND MATE®

Standard Master Frame

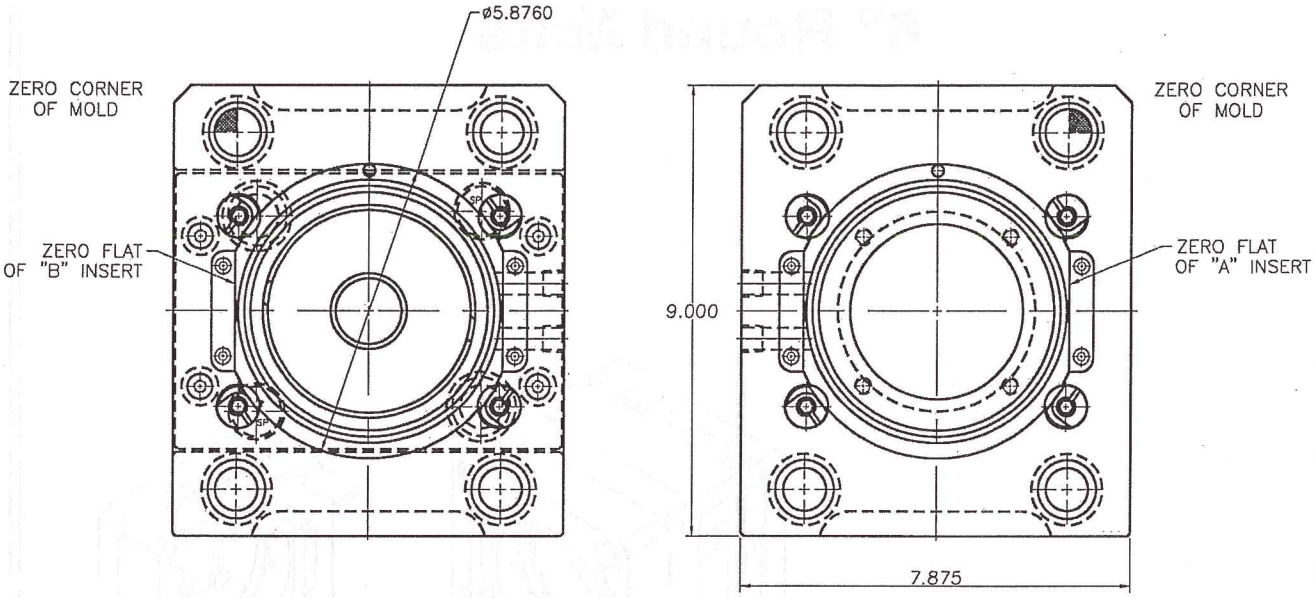

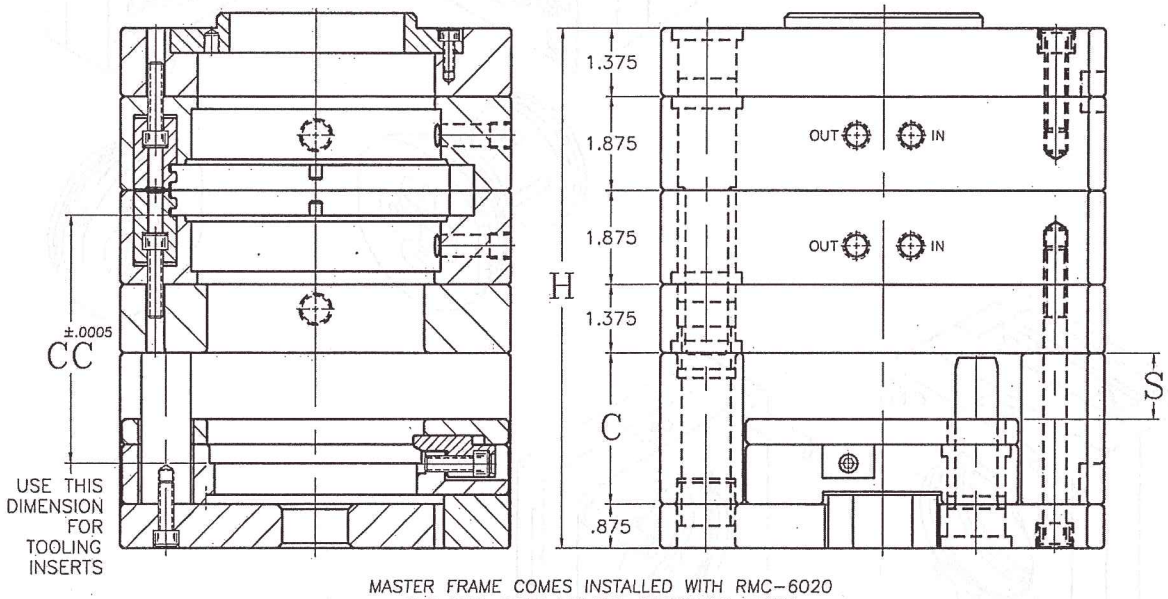

MASTER FRAME COMES INSTALLED WITH RMC-6020 AND RMC-6038 UNLESS OTHERWISE NOTED

STANDARD MASTER FRAME

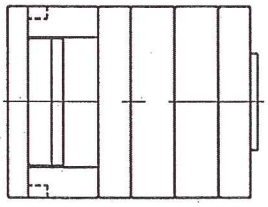

STYLE #	C	CC	H	S
RMF-0613	3	4.9375	10.375	1.312
RMF-0614	4	5.9375	11.375	2.312

6" ROUND MATE®

Standard Components

MODULAR MOLD SYSTEMS

INSULATION BOARD

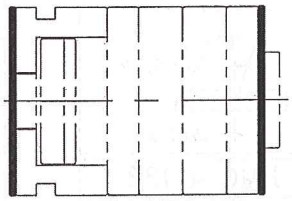

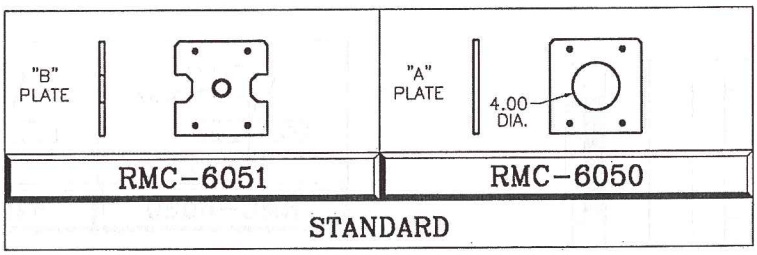

OPTIONAL

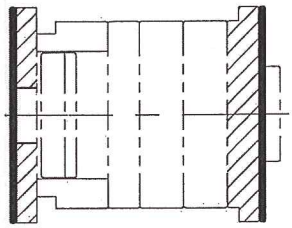

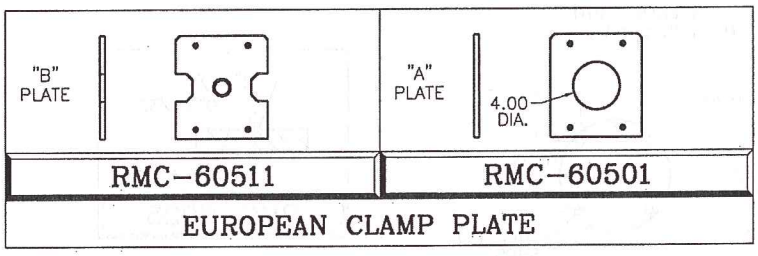

EXTENDED LOCATING RING

NEED ONLY IF INSULATOR BOARD IS USED

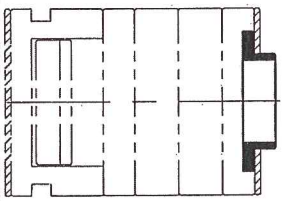

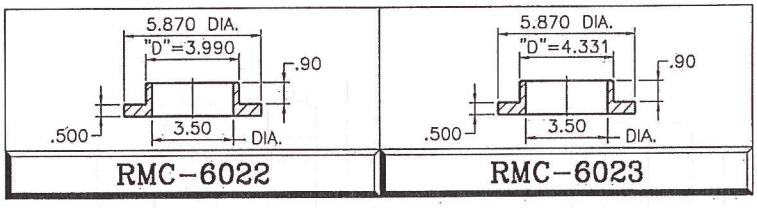

MOUNTING SCREWS INCLUDED

MAT'L 4140

LOCATING RING

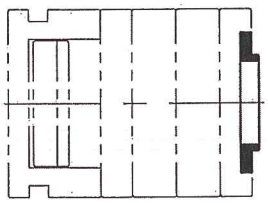

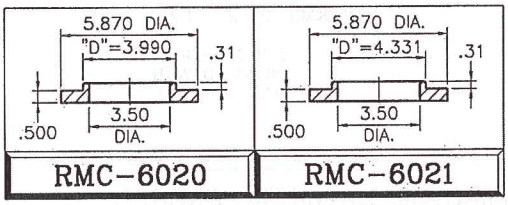

MOUNTING SCREWS INCLUDED

MAT'L 4140

EXTENDED NOZZLE DISC

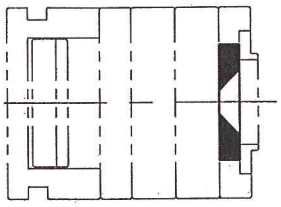

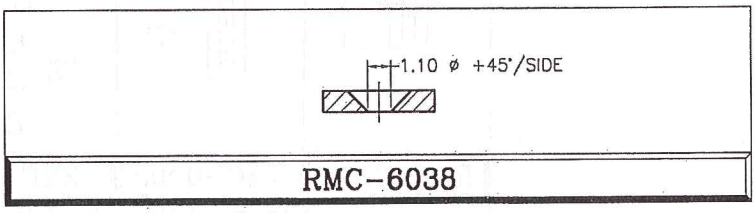

MOUNTING SCREWS INCLUDED

MAT'L 6150 H.T.

6" ROUND MATE®
Standard Components

SPRUE BUSHING DISC

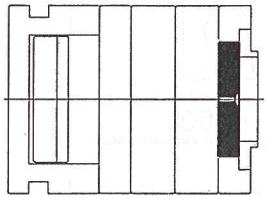

SPRUE BUSHING DISC AND EXTENDED NOZZLE DISC BOLT INTO MASTER FRAME WITH BOLT PATTERN SHOWN

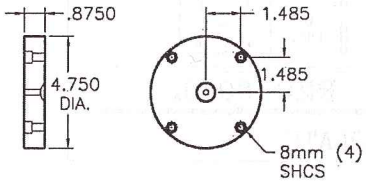

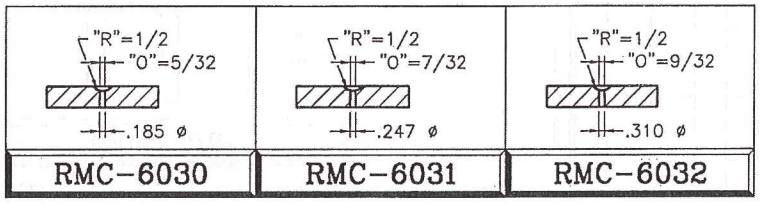

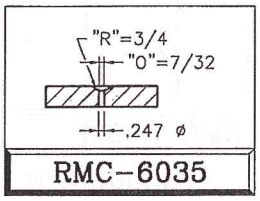

MOUNTING SCREWS INCLUDED

EJECTOR K.O. MOUNTING BLOCK

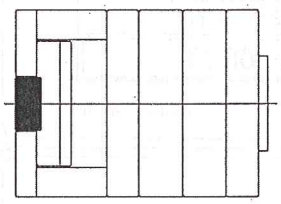

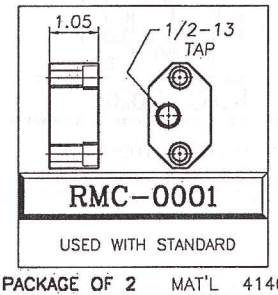

PACKAGE OF 2 MAT'L 4140

2 K.O. BLOCKS INCLUDED WITH MASTER FRAME

RETAINER/LIFTER – EJECTOR RETAINER WRENCH

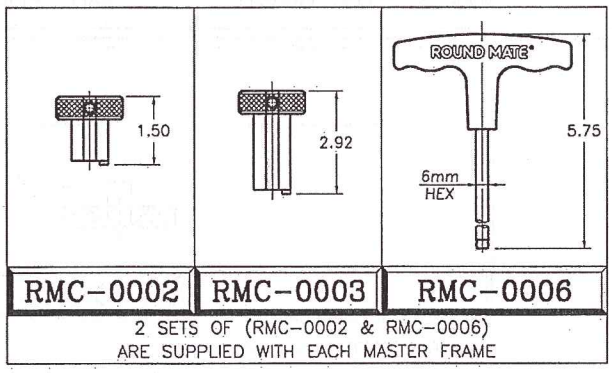

www.modularmoldsystems.com Phone: 800-860-3974 419-675-3334 Fax: 419-675-3283

Notes:

6" ROUND MATE®

3-Plate Master Frame

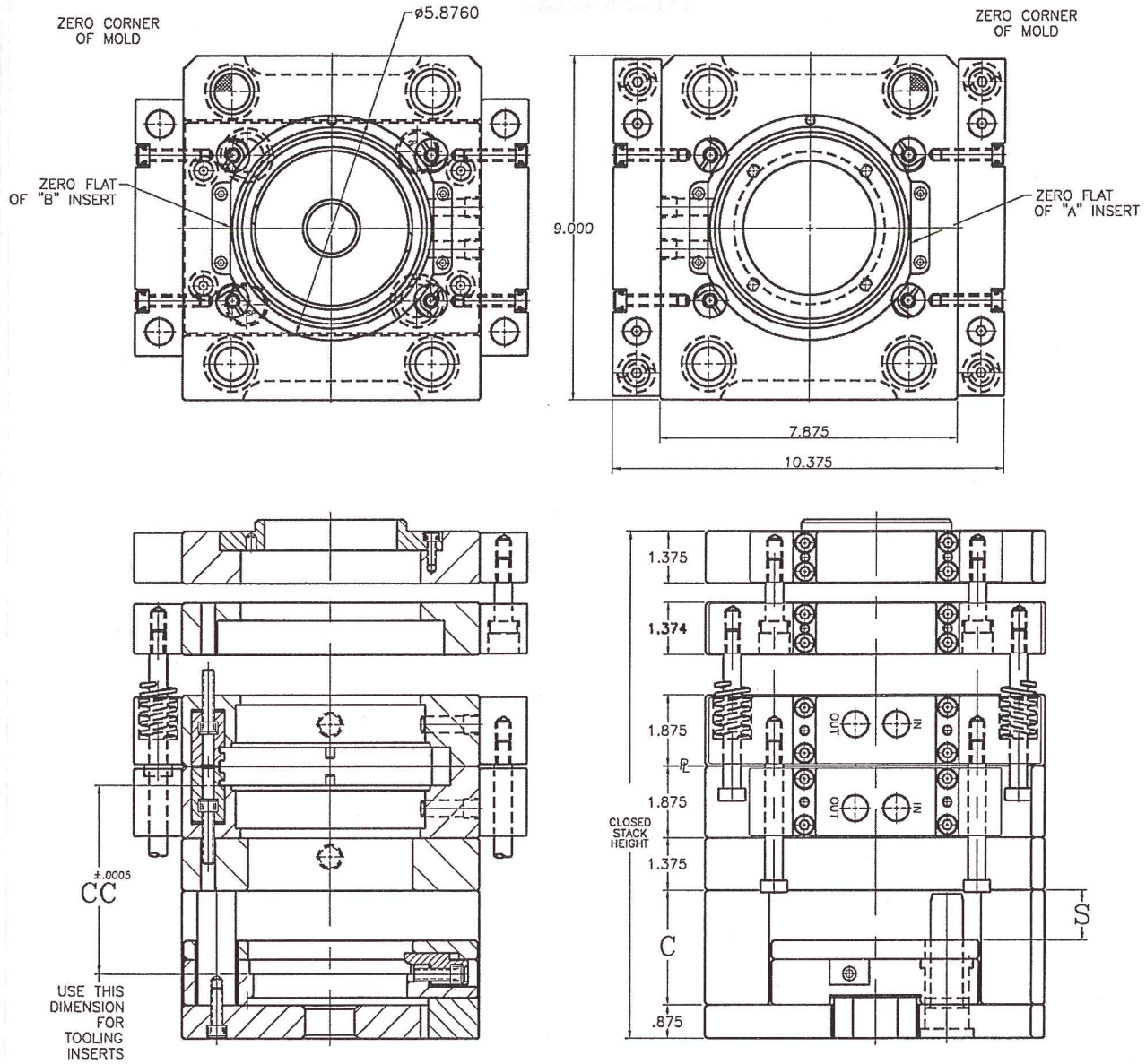

WHEN ORDERING A SINGLE POSITION MASTER FRAME PLEASE SPECIFY: LOCATING RING; SPRUE BUSHING DISC

STANDARD MASTER FRAME WITH 3 PLATE WITH SPRUE GATING

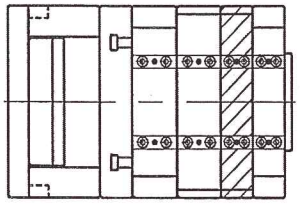

STYLE #	C	CC	H	S
RMF-4613	3	4.9375	11.750	1.312
RMF-4614	4	5.9375	12.750	2.312

www.modularmoldsystems.com Phone: 800-860-3974 419-675-3334 Fax: 419-675-3283

6" ROUND MATE®

3-Plate Components

MODULAR MOLD SYSTEMS

INSULATOR BOARD

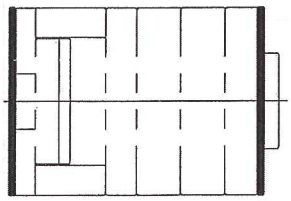

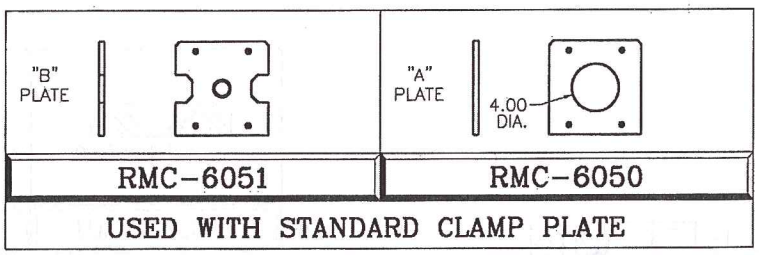

OPTIONAL

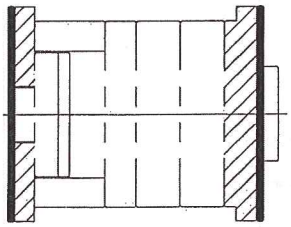

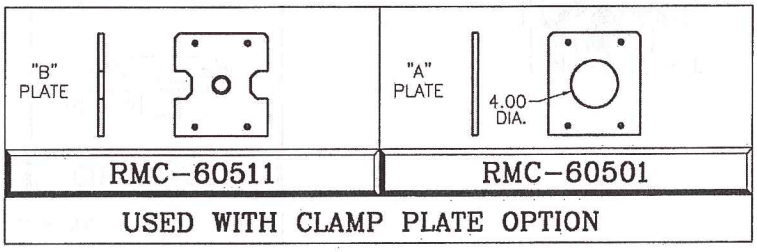

EXTENDED LOCATING RING

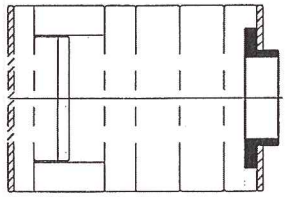

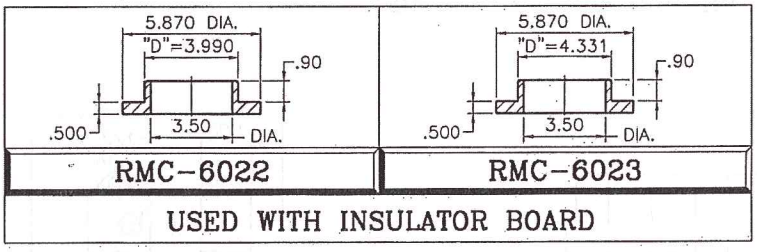

MOUNTING SCREWS INCLUDED MAT'L 4140

LOCATING RING

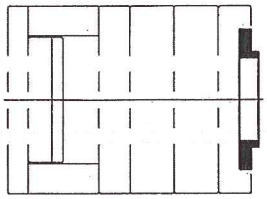

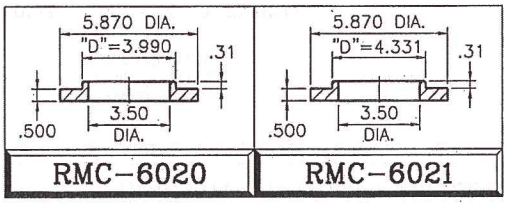

MOUNTING SCREWS INCLUDED MAT'L 4140

Components continued on following catalog page

6" ROUND MATE®

3-Plate Components

3 PLATE RUNNER STRIPPER DISC AND EXTENDED NOZZLE CONE SET

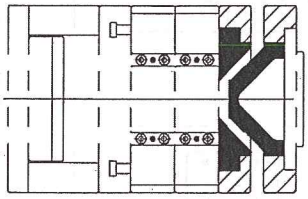

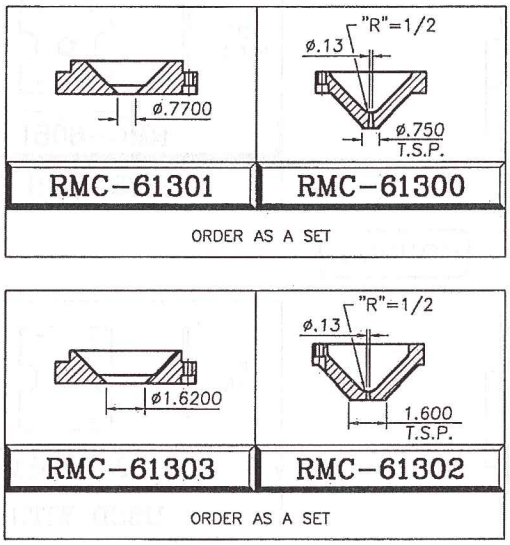

EJECTOR K.O. MOUNTING BLOCK

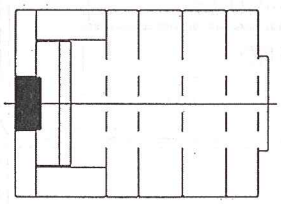

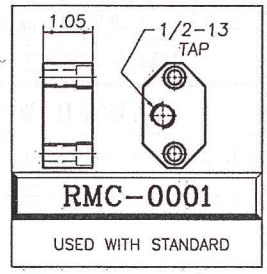

PACKAGE OF 2 MAT'L 4140

2 K.O. BLOCKS
INCLUDED WITH
MASTER FRAME

RETAINER/LIFTER – EJECTOR RETAINER WRENCH

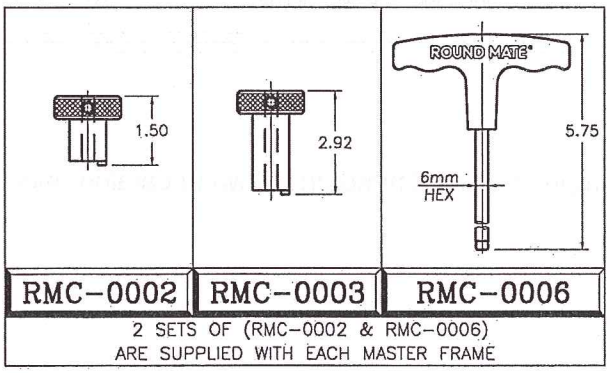

 www.modularmoldsystems.com Phone: 800-860-3974 419-675-3334 Fax: 419-675-3283

Notes:

6" ROUND MATE®

EX2 Master Frame

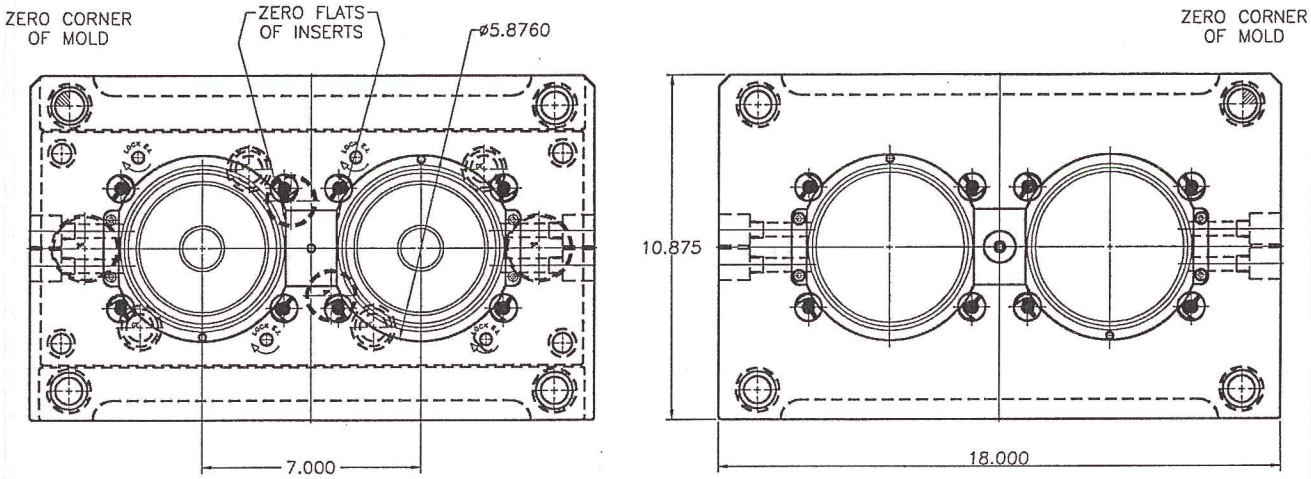

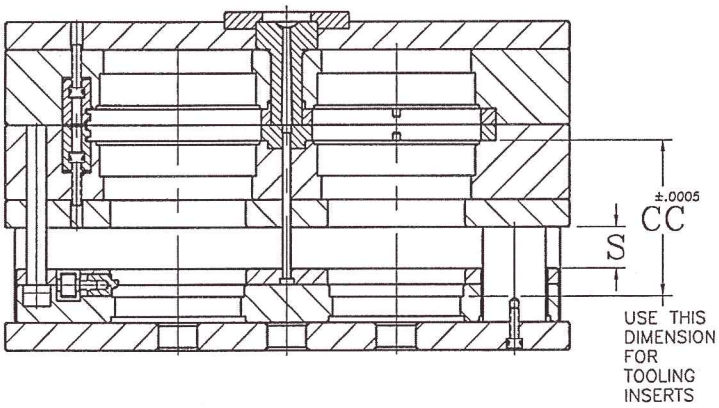

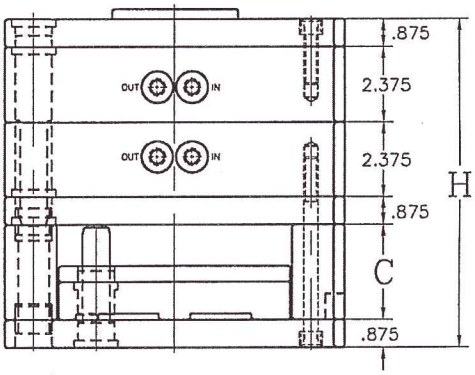

MULTI-POSITION MASTER FRAMES ARE SUPPLIED WITH SPI STANDARD KNOCKOUT LOCATIONS. NON-STANDARD KNOCKOUT LOCATIONS WILL BE QUOTED UPON REQUEST.

WHEN ORDERING A MULTI-POSITION MASTER FRAME PLEASE SPECIFY: RUNNER SIZE; RUNNER BLOCK HEIGHT; SPRUE BUSHING "R" & "O" DIM.; LOCATING RING TYP

STANDARD 2 POSITION MASTER FRAME

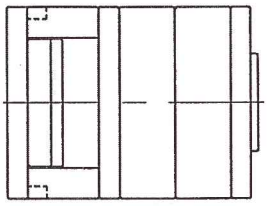

STYLE #	C	CC	H	S
RMF-0623	3	4.9375	10.375	1.312
RMF-0624	4	5.9375	11.375	2.312
RMF-0625	5	6.9375	12.375	3.312

www.modularmoldsystems.com Phone: 800-860-3974 419-675-3334 Fax: 419-675-3283

6" ROUND MATE®

EX2 Components

MODULAR MOLD SYSTEMS

INSULATOR BOARD

OPTIONAL

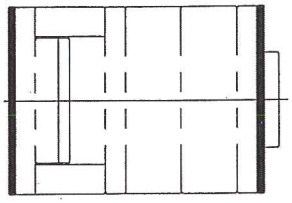

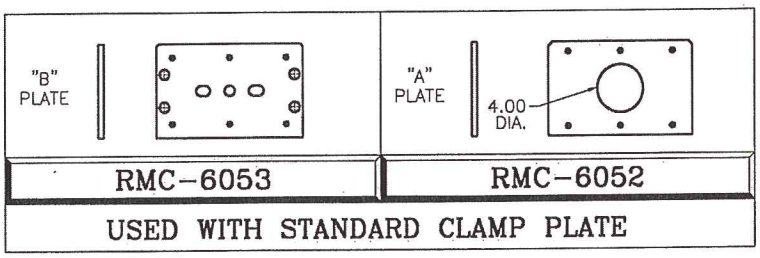

EXTENDED LOCATING RING

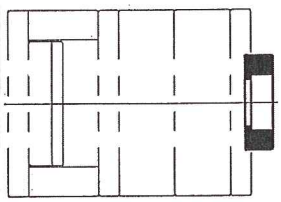

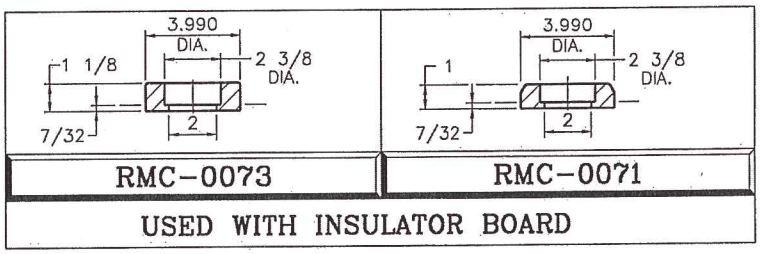

LOCATING RING

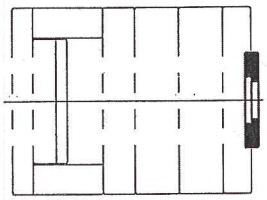

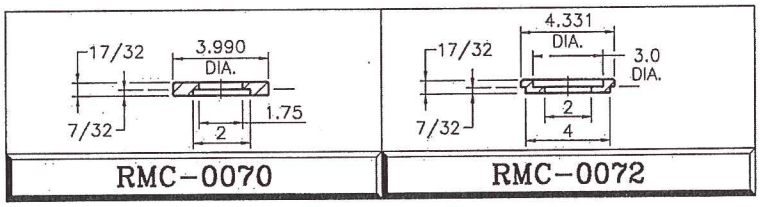

RETAINER/LIFTER

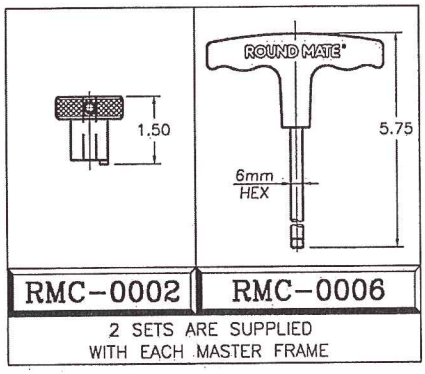

EJECTOR RETAINER WRENCH

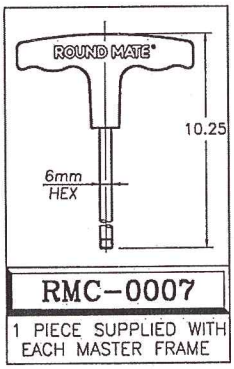

MODULAR MOLD SYSTEMS

Notes:

8" Round Mate

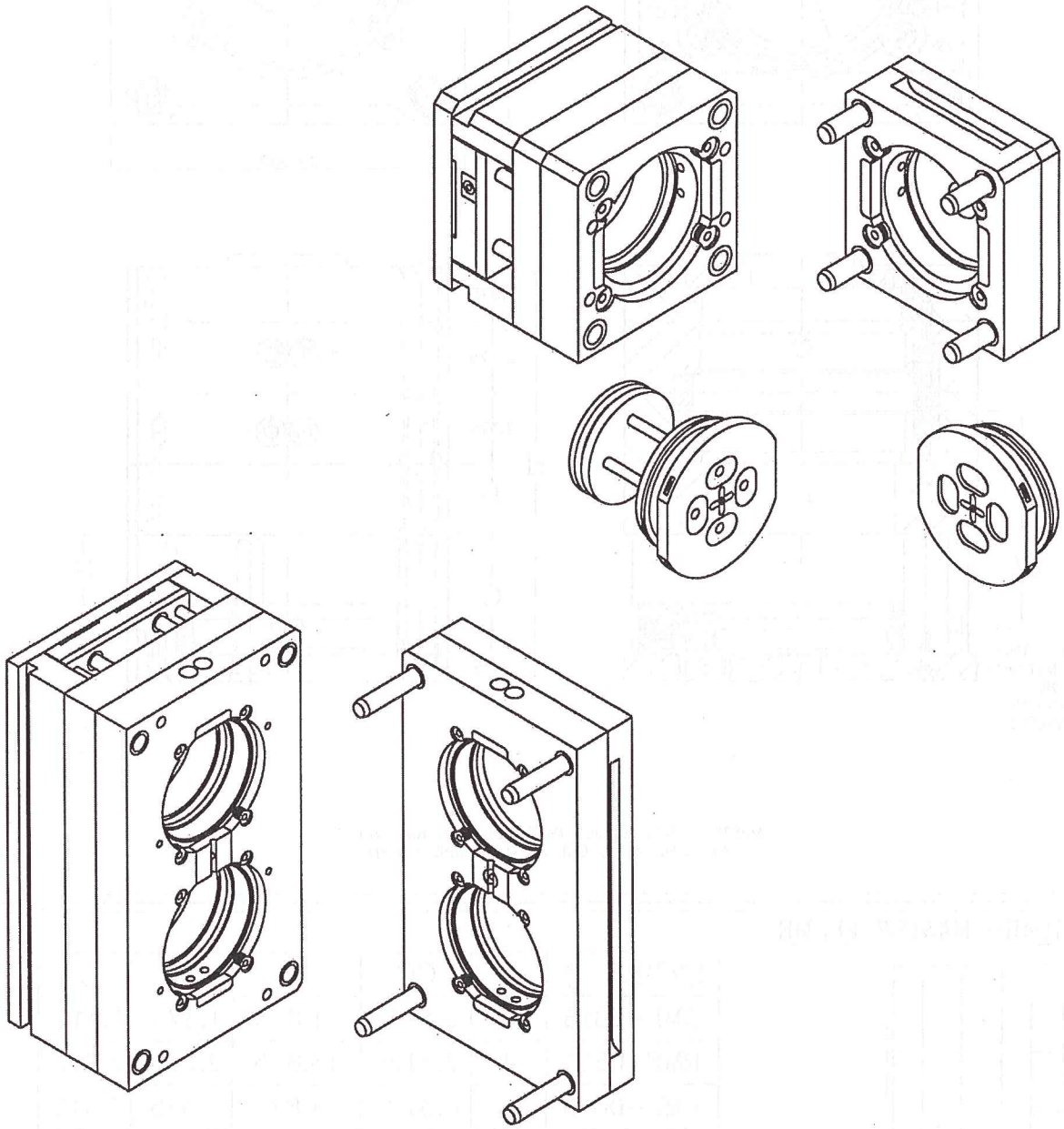

8" ROUND MATE®

Standard Master Frame

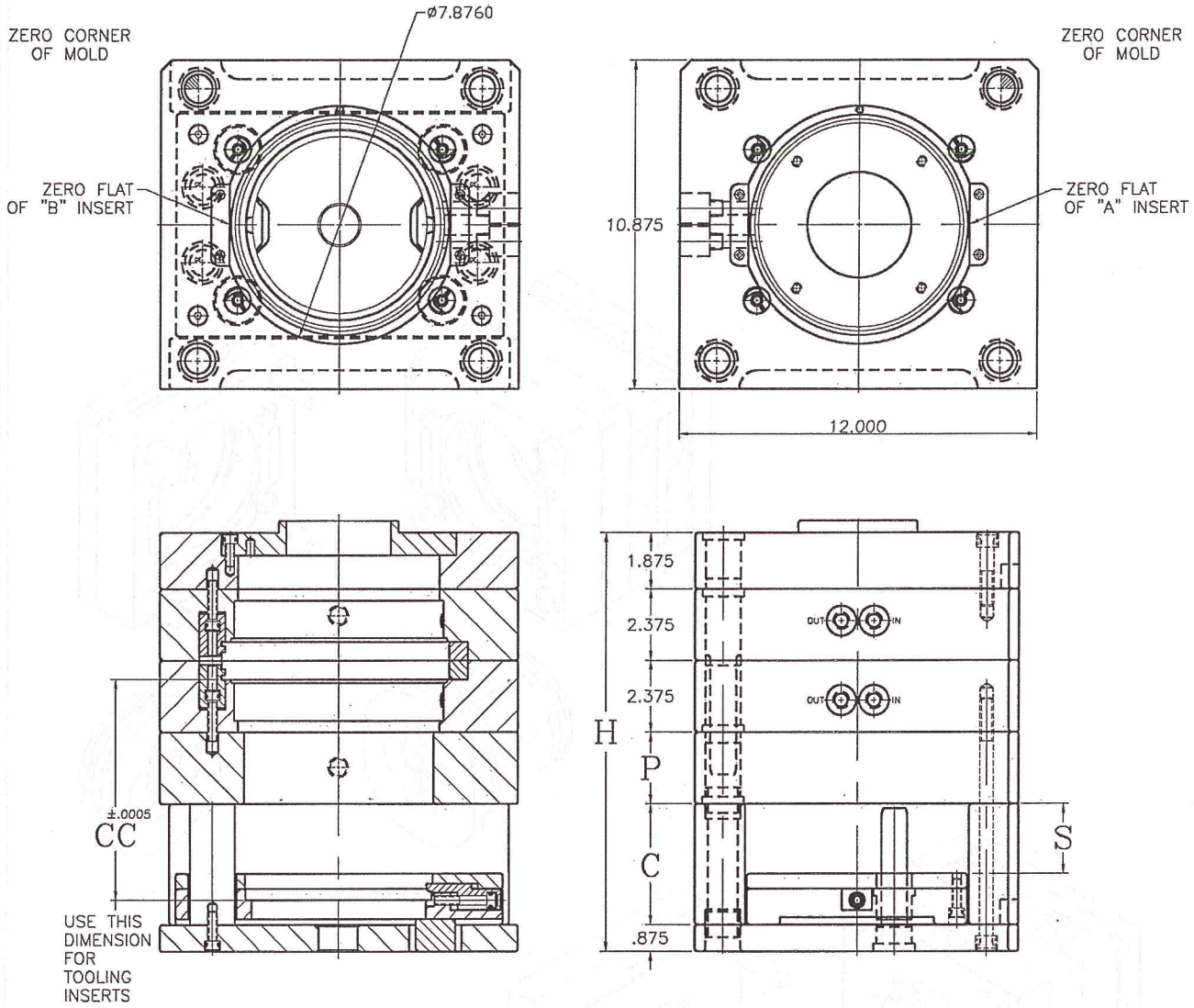

MASTER FRAME COMES INSTALLED WITH RMC-8020 AND RMC-8038 UNLESS OTHERWISE NOTED

STANDARD MASTER FRAME

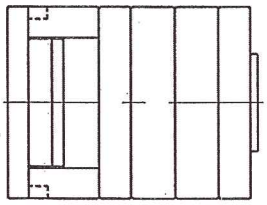

STYLE #	C	CC	H	P	S
RMF-0813	3	5.3125	11.875	1.375	1.312
RMF-0814	4	7.3125	13.875	2.375	2.312
RMF-0815	5	8.3125	14.875	2.375	3.312

8" ROUND MATE®

Standard Components

MODULAR MOLD SYSTEMS

INSULATOR BOARD

OPTIONAL

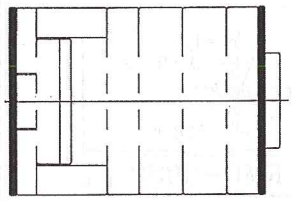

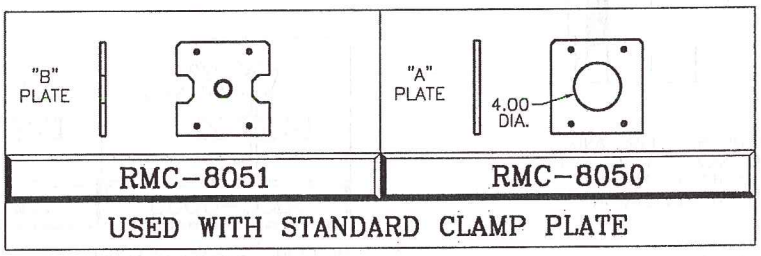

EXTENDED LOCATING RING

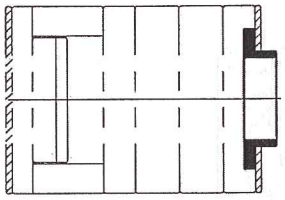

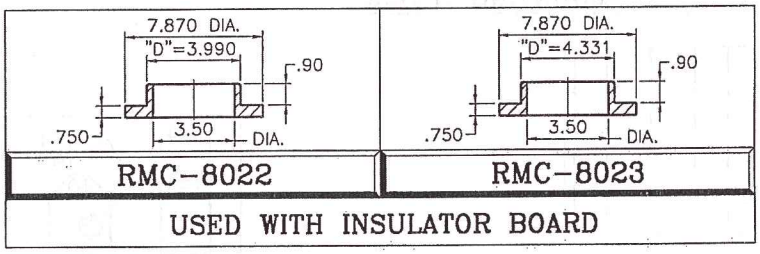

MOUNTING SCREWS INCLUDED

MAT'L 4140

LOCATING RING

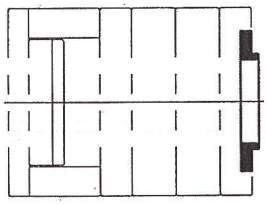

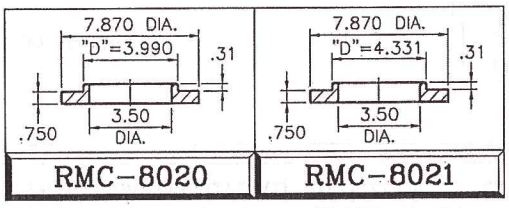

MOUNTING SCREWS INCLUDED

MAT'L 4140

EXTENDED NOZZLE DISC

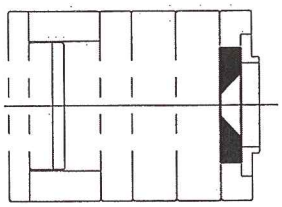

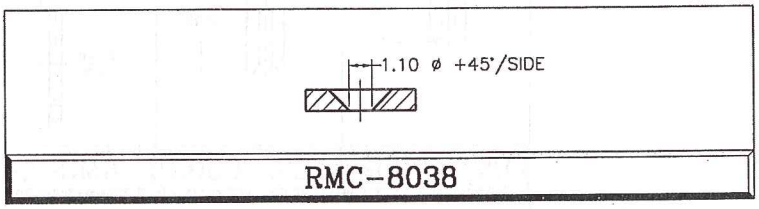

MOUNTING SCREWS INCLUDED

MAT'L 6150 H.T.

8" ROUND MATE®
Standard Components

SPRUE BUSHING DISC

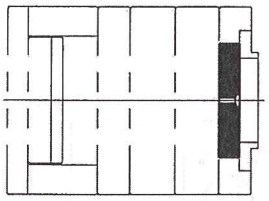

SPRUE BUSHING DISC AND EXTENDED NOZZLE DISC BOLT INTO MASTER FRAME WITH BOLT PATTERN SHOWN

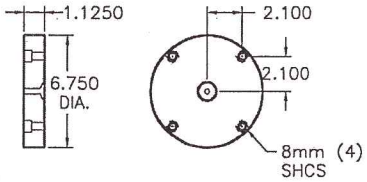

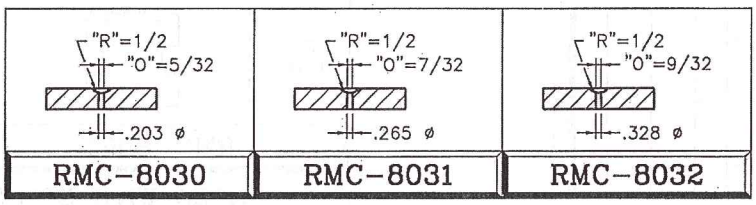

RMC-8030	RMC-8031	RMC-8032

MOUNTING SCREWS INCLUDED

MAT'L 6150 H.T.

EJECTOR K.O. MOUNTING BLOCK

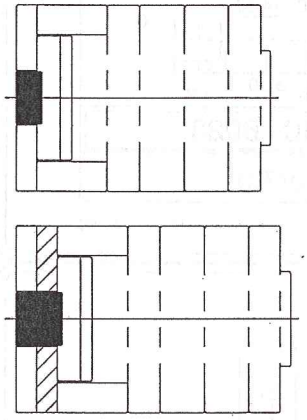

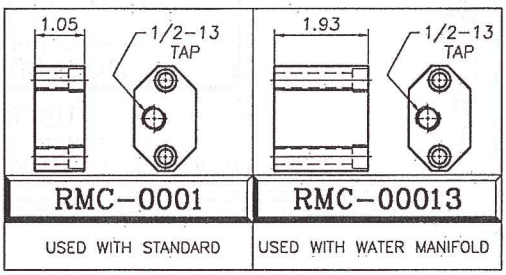

RMC-0001	RMC-00013
USED WITH STANDARD	USED WITH WATER MANIFOLD

PACKAGE OF 2

2 K.O. BLOCKS INCLUDED WITH MASTER FRAME

MAT'L 4140

RETAINER/LIFTER – EJECTOR RETAINER WRENCH

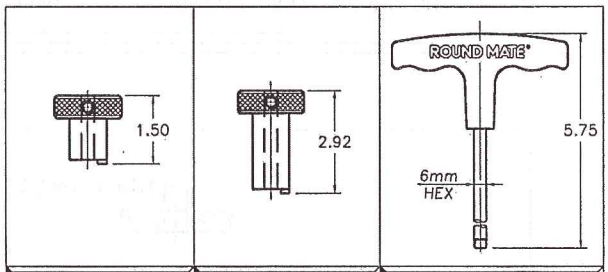

RMC-0002	RMC-0003	RMC-0006

2 SETS ARE SUPPLIED WITH EACH MASTER FRAME

www.modularmoldsystems.com Phone: 800-860-3974 419-675-3334 Fax: 419-675-3283

Notes:

8" ROUND MATE®

3-Plate Master Frame

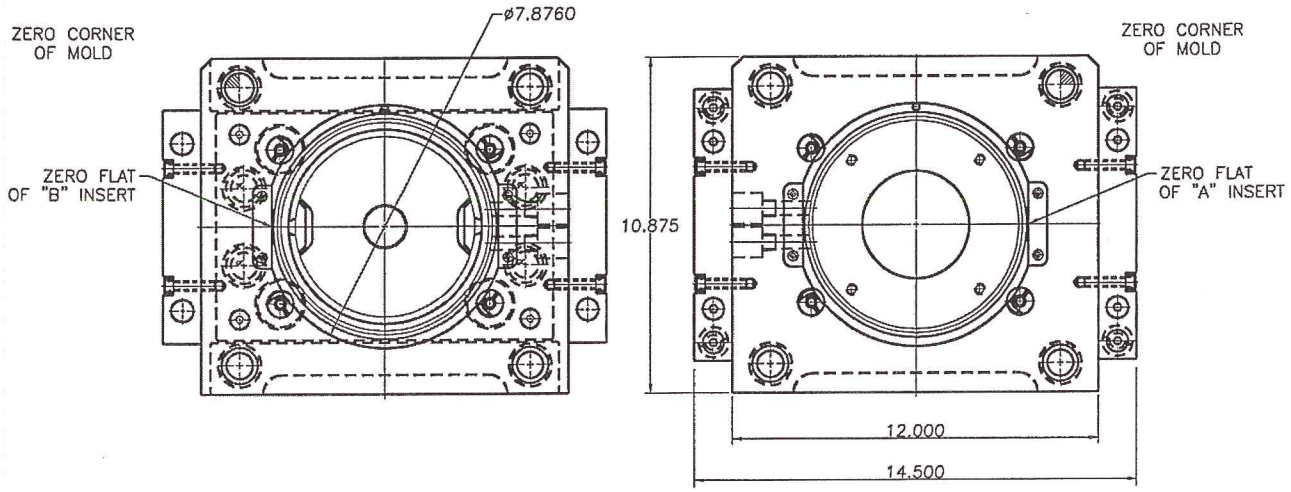

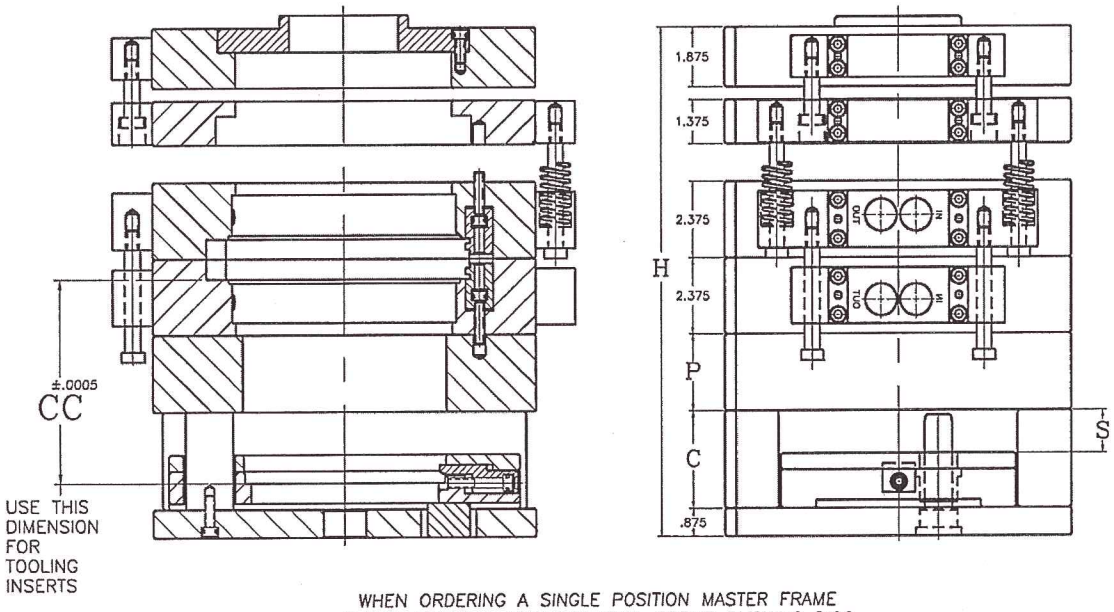

WHEN ORDERING A SINGLE POSITION MASTER FRAME PLEASE SPECIFY: LOCATING RING; SPRUE BUSHING DISC

STANDARD MASTER FRAME WITH 3 PLATE WITH SPRUE GATING

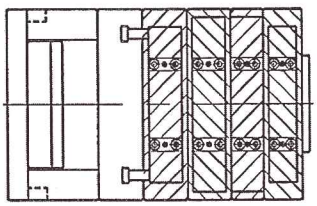

STYLE #	C	CC	H	P	S
RMF-4813	3	5.3125	13.250	1.375	1.312
RMF-4814	4	7.3125	15.250	2.375	2.312
RMF-4815	5	8.3125	16.250	2.375	3.312

 www.modularmoldsystems.com Phone: 800-860-3974 419-675-3334 Fax: 419-675-3283

8" ROUND MATE®

3-Plate Components

MODULAR MOLD SYSTEMS

INSULATOR BOARD

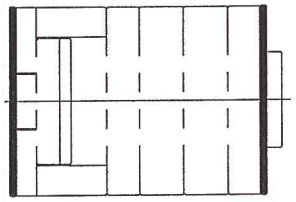

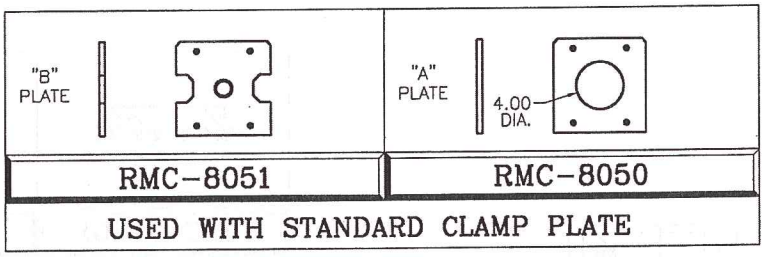

RMC-8051	RMC-8050
USED WITH STANDARD CLAMP PLATE	

OPTIONAL

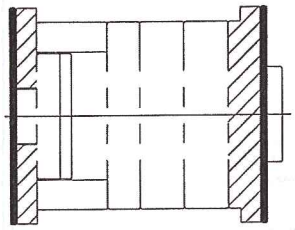

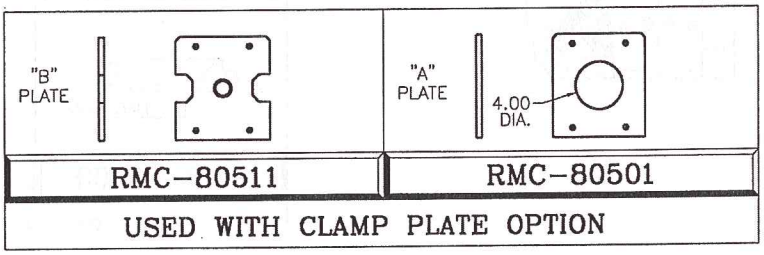

RMC-80511	RMC-80501
USED WITH CLAMP PLATE OPTION	

EXTENDED LOCATING RING

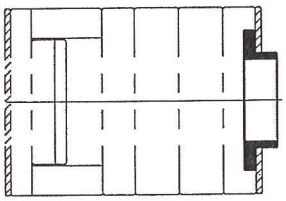

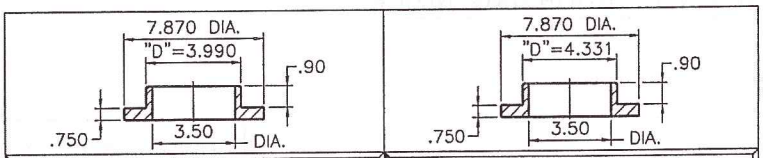

RMC-8022	RMC-8023
USED WITH INSULATOR BOARD	

MOUNTING SCREWS INCLUDED MAT'L 4140

LOCATING RING

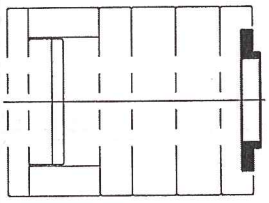

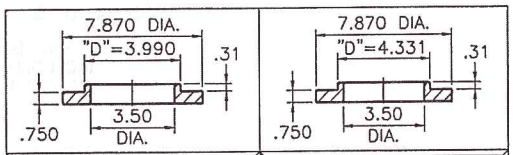

RMC-8020	RMC-8021

MOUNTING SCREWS INCLUDED MAT'L 4140

Components continued on following catalog page

8" ROUND MATE®

3-Plate Components

3 PLATE RUNNER STRIPPER DISC AND EXTENDED NOZZLE CONE SET

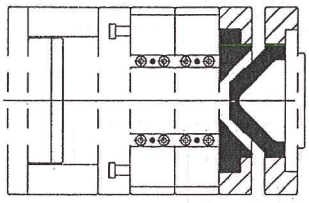

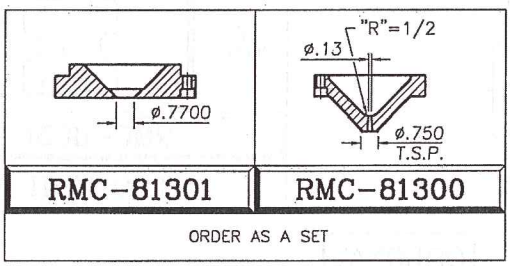

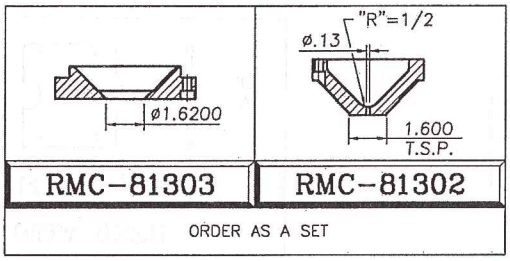

EJECTOR K.O. MOUNTING BLOCK

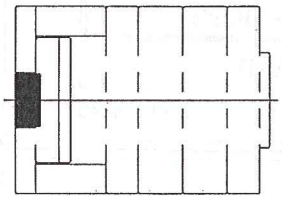

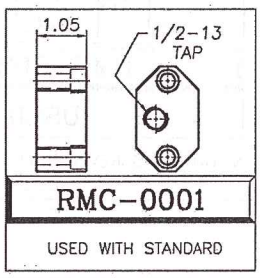

PACKAGE OF 2 MAT'L 4140

2 K.O. BLOCKS
INCLUDED WITH
MASTER FRAME

RETAINER/LIFTER – EJECTOR RETAINER WRENCH

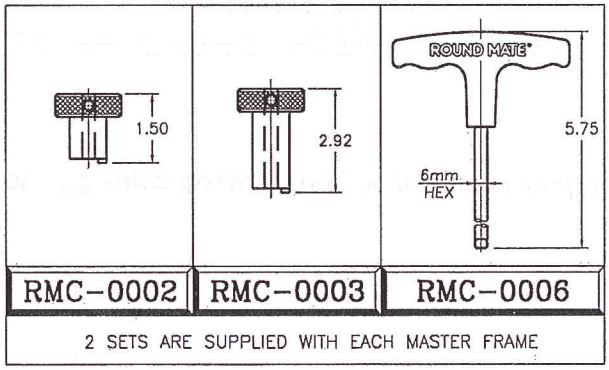

Notes:

8" ROUND MATE®

EX2 Master Frame

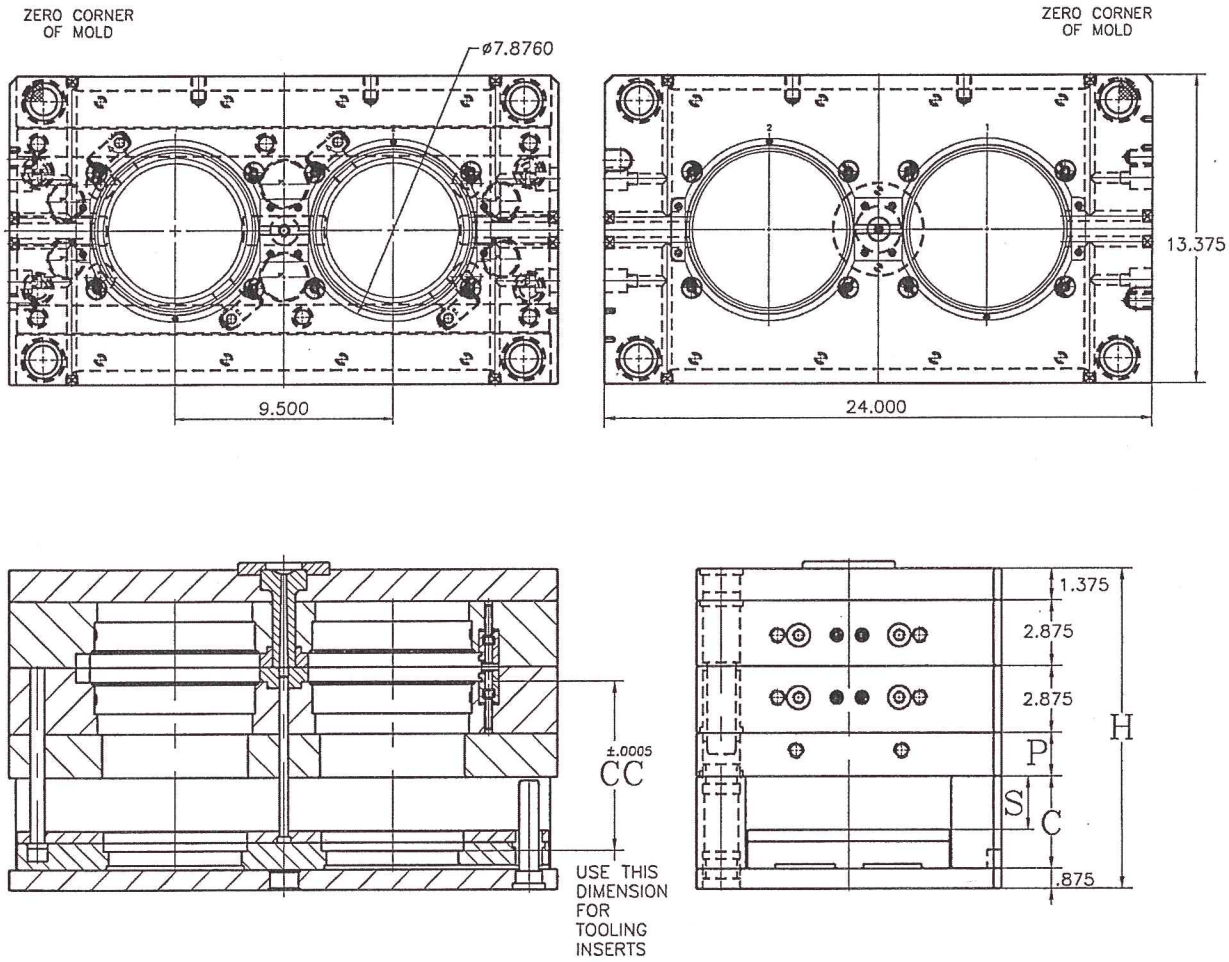

MULTI-POSITION MASTER FRAMES ARE SUPPLIED WITH SPI STANDARD KNOCKOUT LOCATIONS. NON-STANDARD KNOCKOUT LOCATIONS WILL BE QUOTED UPON REQUEST.

WHEN ORDERING A MULTI-POSITION MASTER FRAME PLEASE SPECIFY: RUNNER SIZE; RUNNER BLOCK HEIGHT; SPRUE BUSHING "R" & "O" DIM.; LOCATING RING TYP

STANDARD 2 POSITION MASTER FRAME

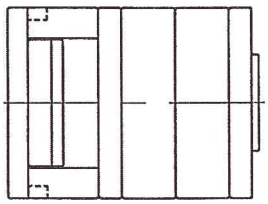

STYLE #	C	CC	H	P	S
RMF-0823	3	5.3125	11.875	.875	1.312
RMF-0824	4	7.3125	13.875	1.875	2.312
RMF-0825	5	8.3125	14.875	1.875	3.312

8" ROUND MATE®

EX2 Components

MODULAR MOLD SYSTEMS

INSULATOR BOARD

OPTIONAL

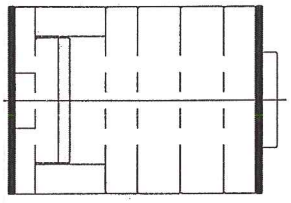

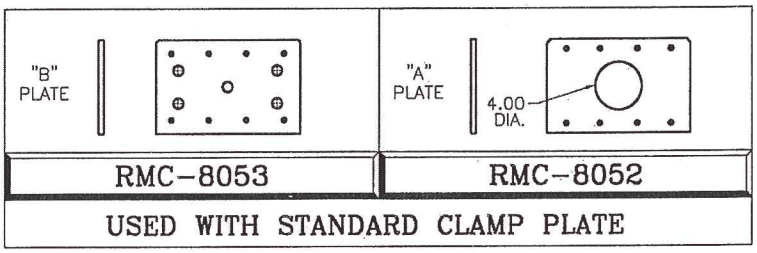

EXTENDED LOCATING RING

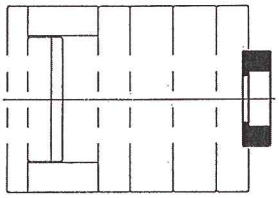

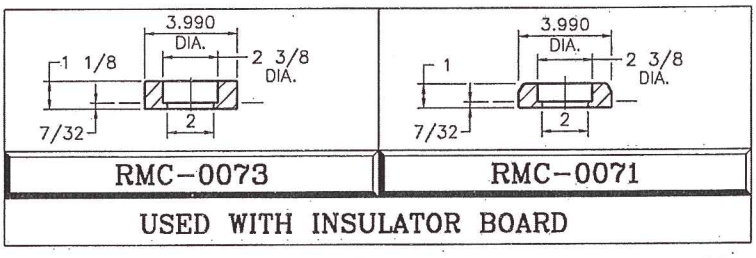

LOCATING RING

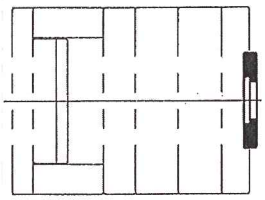

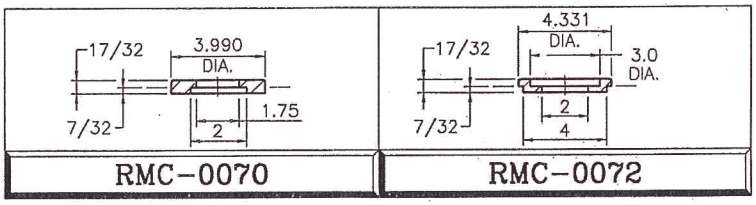

RETAINER/LIFTER

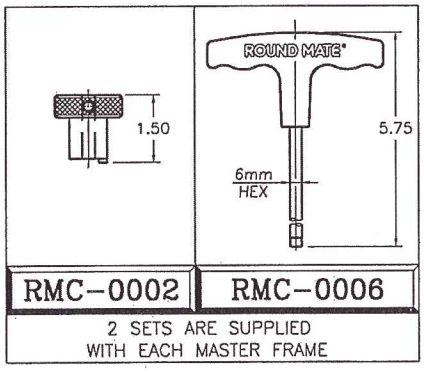

EJECTOR RETAINER WRENCH

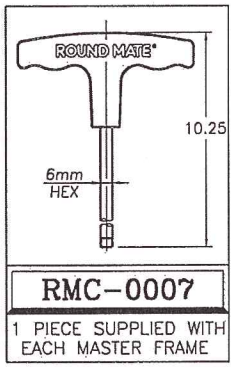

MODULAR MOLD SYSTEMS

Notes:

Section Three

Options for 6" and 8" Standard Round Mate Master Frames

ROUND MATE®
Clamp Plate Option

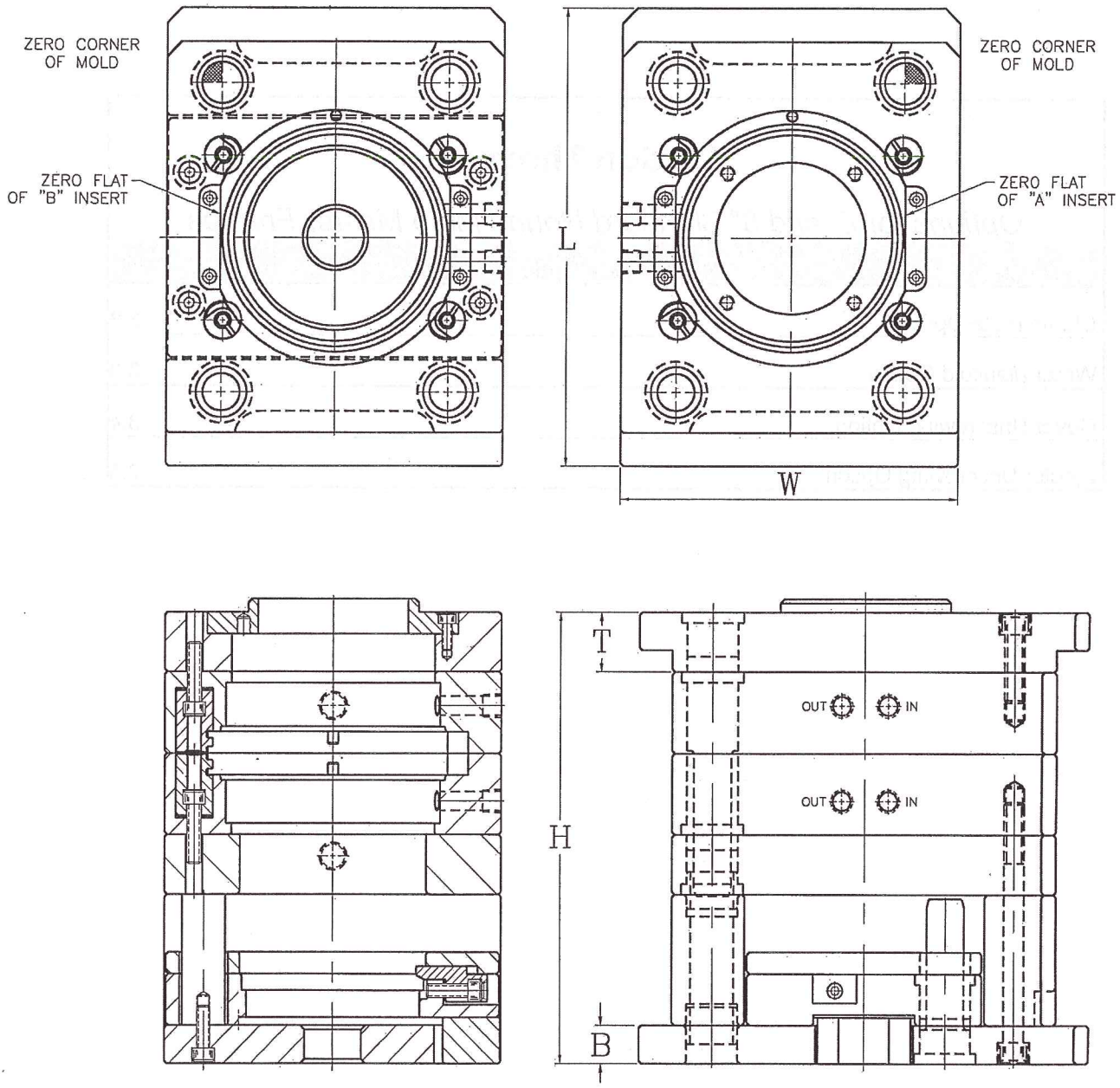

STANDARD MASTER FRAME WITH CLAMP PLATE OPTION

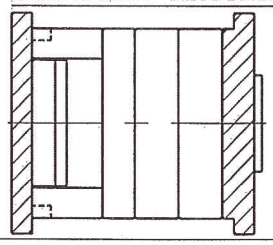

SIZE	CATALOG	B	T	W	L	H
6"	RMP–0608		1.375	7.875	11.000	NO CHANGE TO "H" (OVERALL BASE HEIGHT)
6"	RMP–0609	.875		7.875	11.000	
8"	RMP–0808		1.875	12.000	12.500	
8"	RMP–0809	.875		12.000	12.500	

PLATES CAN BE SOLD SEPARATELY PLEASE CALL FOR DETAILS.

ROUND MATE®
Water Manifold Option

MODULAR MOLD SYSTEMS

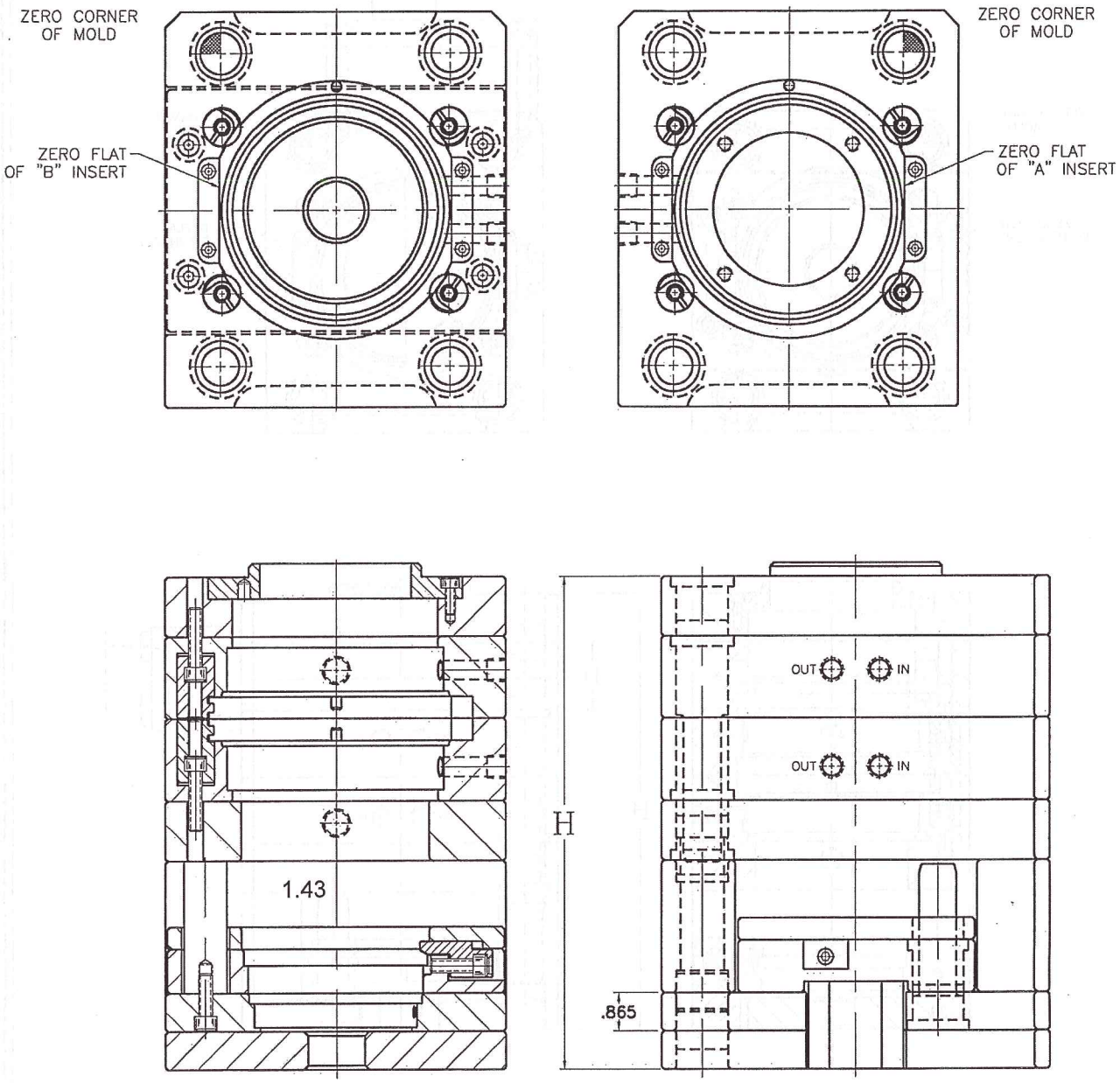

STANDARD MASTER FRAME WITH WATER MANIFOLD OPTION

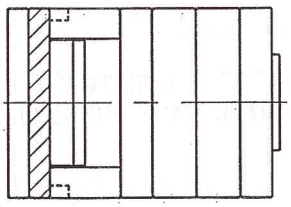

SIZE	CATALOG	THIS OPTION ADDS
6"	RMP-0617	.865 TO "H"
8"	RMP-0817	(OVERALL BASE HEIGHT)

ROUND MATE®

Cover Unscrewing Option

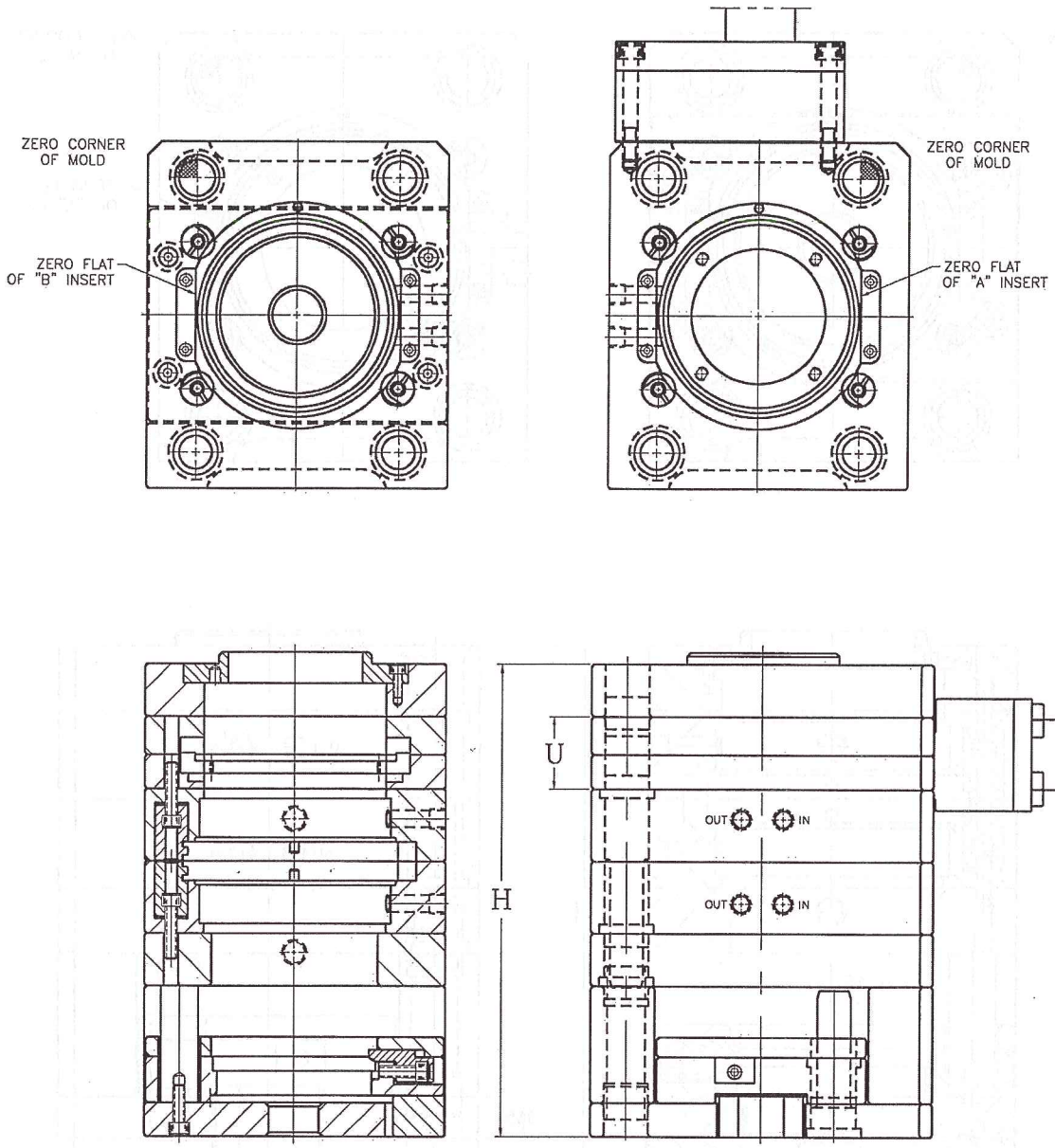

STANDARD MASTER FRAME WITH COVER UNSCREWING OPTION

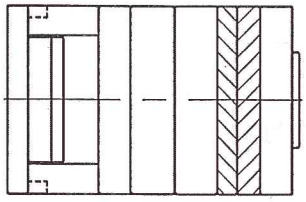

SIZE	CATALOG	U	TYPE	H
6"	RMC-6180	1.875	HYDRAULIC	ADD "U" VALUE TO "H" (OVERALL BASE HEIGHT)
6"	RMC-6190	1.875	ELECTRIC	
8"	RMC-8180	3.375	HYDRAULIC	
8"	RMC-8190	3.375	ELECTRIC	

www.modularmoldsystems.com Phone: 800-860-3974 419-675-3334 Fax: 419-675-3283

ROUND MATE®

Ejector Unscrewing Option

MODULAR MOLD SYSTEMS

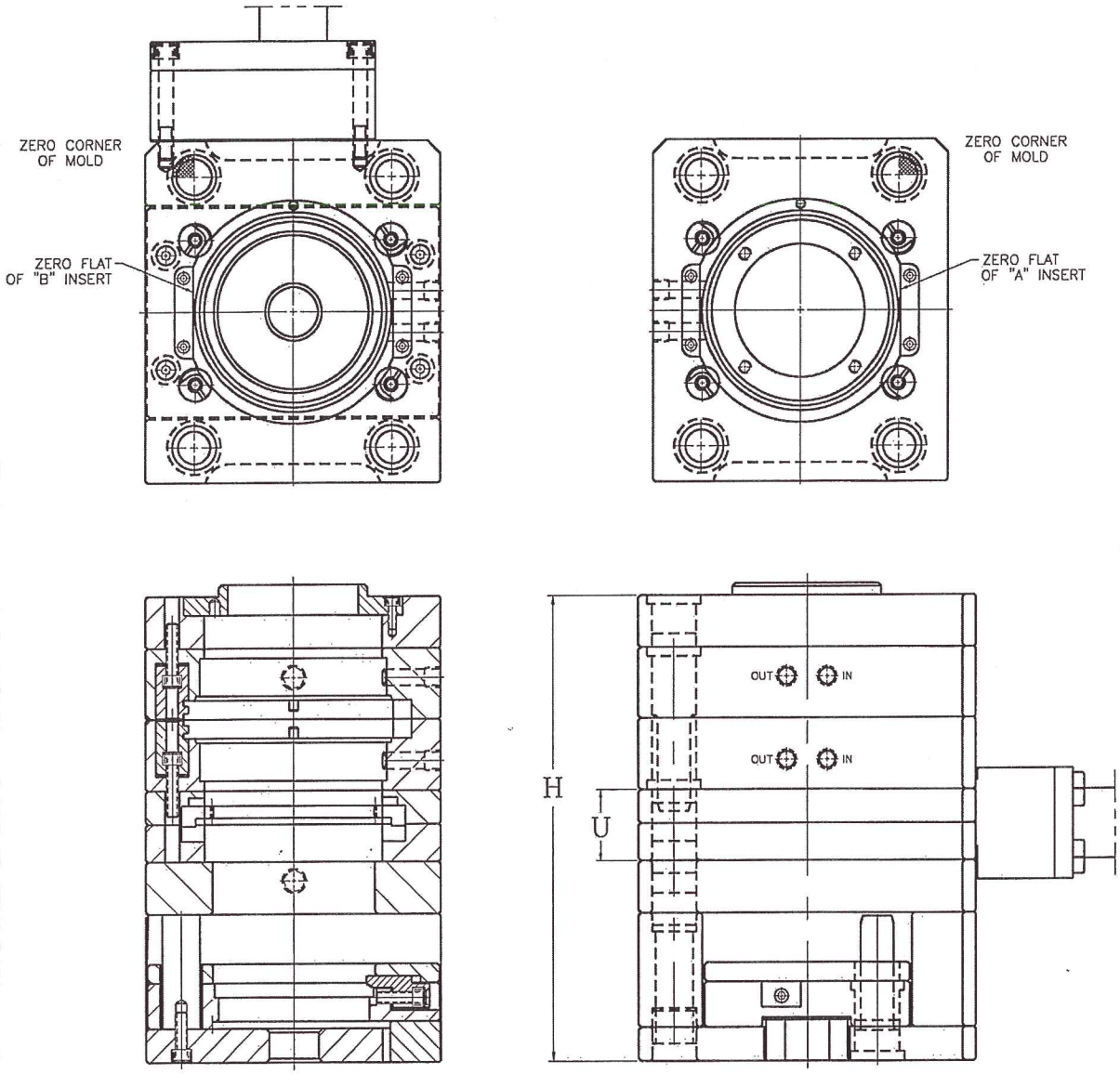

STANDARD MASTER FRAME WITH EJECTOR UNSCREWING OPTION

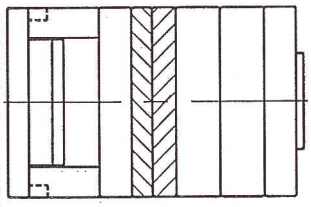

SIZE	CATALOG	U	TYPE	H
6"	RMC-6180	1.875	HYDRAULIC	ADD "U" VALUE TO "H" (OVERALL BASE HEIGHT)
6"	RMC-6190	1.875	ELECTRIC	
8"	RMC-8180	3.375	HYDRAULIC	
8"	RMC-8190	3.375	ELECTRIC	

MODULAR MOLD SYSTEMS

Notes:

MODULAR MOLD SYSTEMS

Section Four

Cavity Inserts & Components

Important Ordering Notes:

When ordering inserts please note that limited steel types and stand up heights are available in stock.

A premium may be added to orders of less than two special order inserts.

MODULAR MOLD SYSTEMS

Notes:

Round Mate Inserts & Components

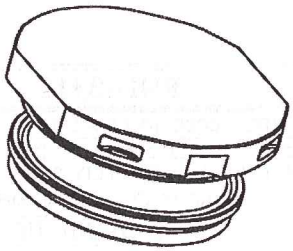

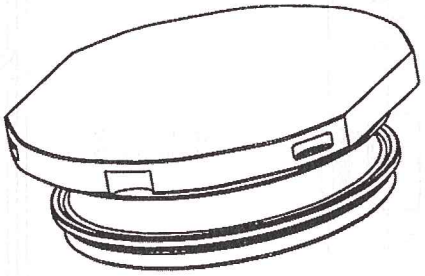

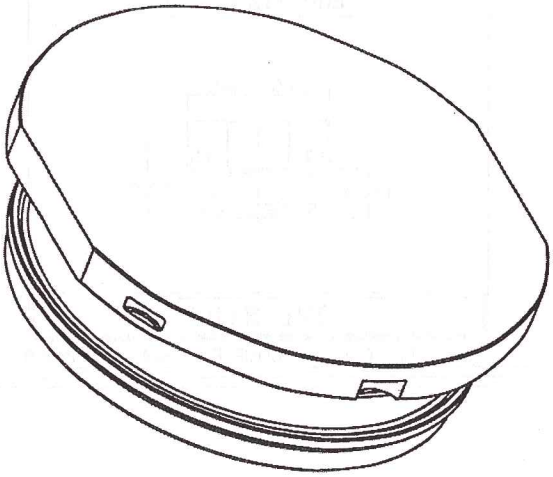

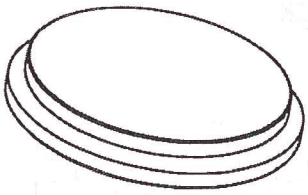

3" ROUND MATE®

Micro Inserts

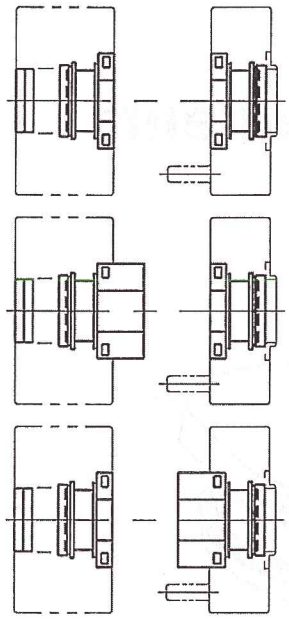

STANDARD "A" & "B"

STANDARD "A"
STAND-UP "B"

STAND-UP "A"
STANDARD "B"

WATER DAM AND SAFETY STRAP INCLUDED
CORE PLATES ARE REQUIRED

STANDARD INSERT

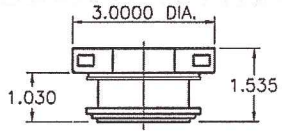

RMI-3*15

* ADD STEEL CODE TO COMPLETE CATALOG NUMBER

WATER DAM AND SAFETY STRAP INCLUDED
CORE PLATES ARE REQUIRED

.100 STAND-UP

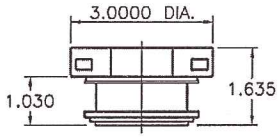

RMI-3*16

* ADD STEEL CODE TO COMPLETE CATALOG NUMBER

WATER DAM AND SAFETY STRAP INCLUDED
CORE PLATES ARE REQUIRED

.500 STAND-UP

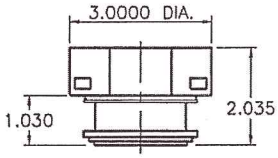

RMI-3*20

* ADD STEEL CODE TO COMPLETE CATALOG NUMBER

AVAILABLE STEEL

* CODE	STEEL
3	P-20 PRE-HARD 32/34 Rc
4	S-7 ANNEALED
5	H-13 ANNEALED
6	420SS ANNEALED
8	420SS PRE-HARD 32/35 Rc

* USE CODE NUMBER ABOVE TO COMPLETE CATALOG NUMBER FOR INSERTS.

GRIND STOCK

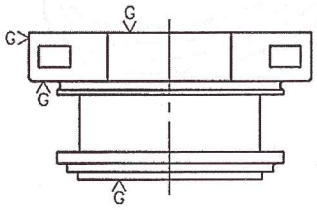

H-13, S-7 & 420SS
HEAT TREATABLE INSERTS
HAVE .005 GRIND STOCK
LEFT ON SURFACES SHOWN
FOR GRIND AFTER HEAT TREAT

www.modularmoldsystems.com Phone: 800-860-3974 419-675-3334 Fax: 419-675-3283

3" ROUND MATE®

Micro Insert Components

MODULAR MOLD SYSTEMS

CORE RETAINER PLATE

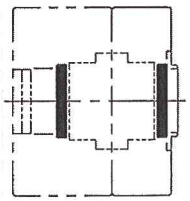

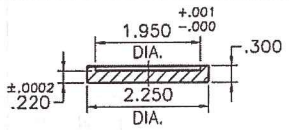

RMC-3001

NOTE: MUST ALWAYS BE USED WITH INSERT

MAT'L 4140

EJECTOR PLATES

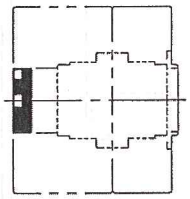

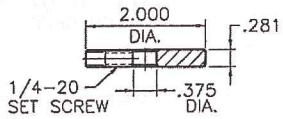

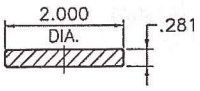

RMC-3003	RMC-3002
EJECTOR PLATE	EJECTOR RETAINER PLATE

MAT'L 4140

O-RINGS

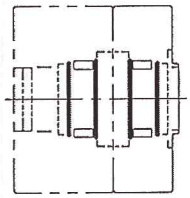

O-RING SET FOR 3" INSERT

SET INCLUDES 2 O-RINGS FOR ONE INSERT

BUNA-N

RMC-3015

2 SETS ARE INCLUDED WITH INSERT SET

O-RING SET FOR 3" INSERT

SET INCLUDES 2 O-RINGS FOR ONE INSERT

VITON – HI TEMP

RMC-3017

ARE AVAILABLE UPON REQUEST

O-RING SET FOR 3" INSERT

PACKAGE OF 10 O-RING SETS

BUNA-N

RMC-3016

ARE AVAILABLE UPON REQUEST

O-RING SET FOR 3" INSERT

PACKAGE OF 4 O-RING SETS

VITON – HI TEMP

RMC-3018

ARE AVAILABLE UPON REQUEST

WATER DAM

1 SUPPLIED WITH EACH INSERT

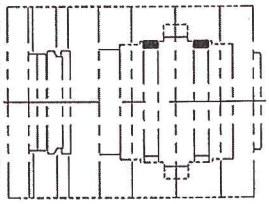

USE IN
3"
4"
6"

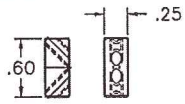

RMC-0010

PACKAGE OF 2 WITH WRENCH AND SAFETY STRAP

MAT'L 416SS

3" ROUND MATE®

Micro Insert Components

WATER BAFFLE (Packs of 10)

NYLON PLASTIC, NOT FOR HIGH TEMPERATURE APPLICATIONS

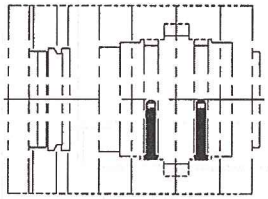

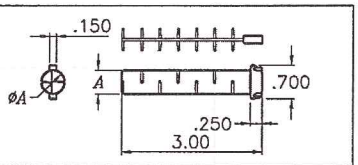

A DIM.	FOR USE WITH 3", 4" AND 6" ROUND MATE INSERTS
.312	RMC-0080
.500	RMC-0081

SAFETY STRAP

1 SUPPLIED WITH EACH INSERT

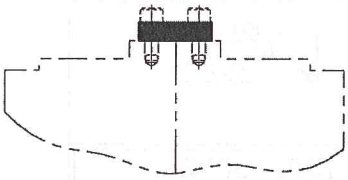

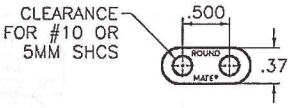

RMC-0017

PACKAGE OF 10

MAT'L NYLON

www.modularmoldsystems.com Phone: 800-860-3974 419-675-3334 Fax: 419-675-3283

MODULAR MOLD SYSTEMS

Notes:

4" ROUND MATE®

Micro Inserts

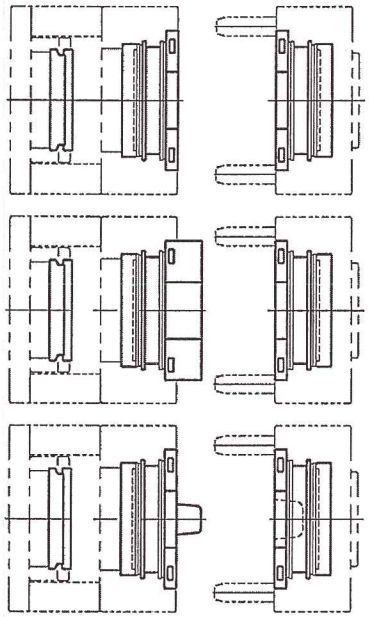

MULTI POSITION MASTER FRAMES CAN NOT USE EXTENDED PARTING LINE ON INSERTS

STANDARD "A" & "B"

STANDARD "A" STAND-UP "B" USED FOR EXTENDED PARTING LINE

STANDARD "A" STAND-UP "B" USED FOR CORE OR INTERLOCKING

AVAILABLE STEEL

* CODE	STEEL
3	P-20 PRE-HARD 32/34 Rc
4	S-7 ANNEALED
5	H-13 ANNEALED
6	420SS ANNEALED
8	420SS PRE-HARD 32/35 Rc

* USE CODE NUMBER ABOVE TO COMPLETE CATALOG NUMBER FOR INSERTS.

GRIND STOCK

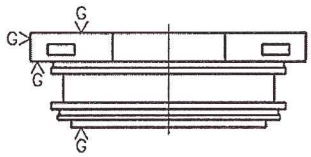

H-13, S-7 & 420SS HEAT TREATABLE INSERTS HAVE .005 GRIND STOCK LEFT ON SURFACES SHOWN FOR GRIND AFTER HEAT TREAT

WATER DAM AND SAFETY STRAP INCLUDED
CORE PLATES ARE REQUIRED

STANDARD INSERT

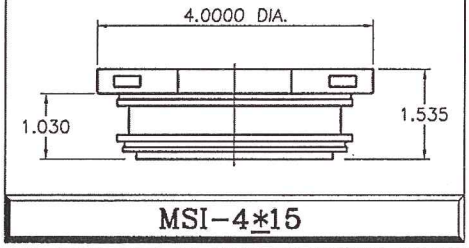

MSI-4*15

* ADD STEEL CODE TO COMPLETE CATALOG NUMBER

WATER DAM AND SAFETY STRAP INCLUDED
CORE PLATES ARE REQUIRED

.100 STAND-UP

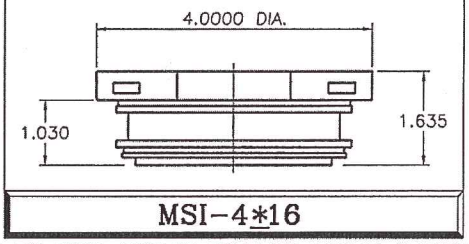

MSI-4*16

* ADD STEEL CODE TO COMPLETE CATALOG NUMBER

WATER DAM AND SAFETY STRAP INCLUDED
CORE PLATES ARE REQUIRED

.500 STAND-UP

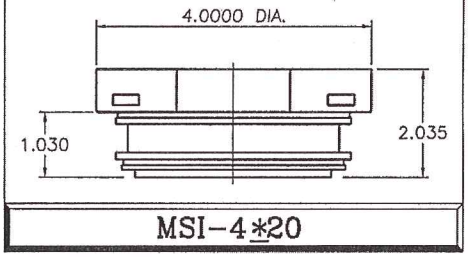

MSI-4*20

* ADD STEEL CODE TO COMPLETE CATALOG NUMBER

WATER DAM AND SAFETY STRAP INCLUDED
CORE PLATES ARE REQUIRED

1.000 STAND-UP

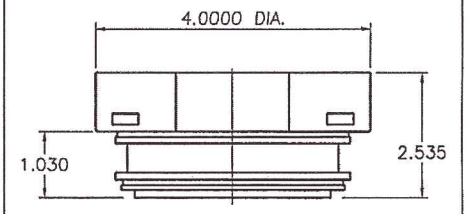

MSI-4*25

* ADD STEEL CODE TO COMPLETE CATALOG NUMBER

www.modularmoldsystems.com Phone: 800-860-3974 419-675-3334 Fax: 419-675-3283

4" ROUND MATE®

Micro Insert Components

MODULAR MOLD SYSTEMS

CORE RETAINER PLATE

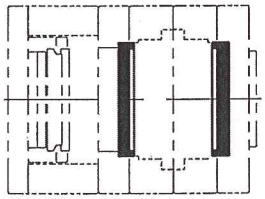

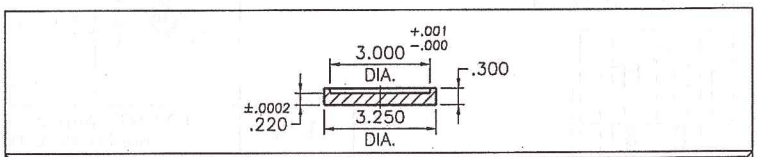

MSC-4001

NOTE: MUST ALWAYS BE USED WITH INSERT. MAT'L 4140

EJECTOR PLATE ASSEMBLY

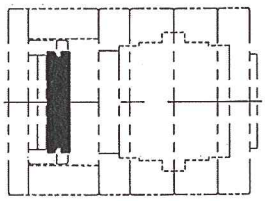

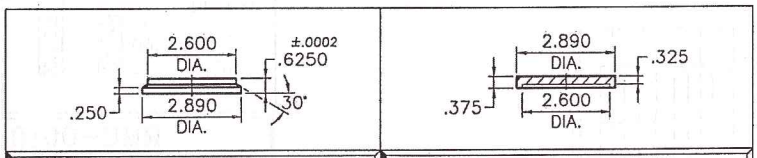

RMC-4003	RMC-4002
EJECTOR PLATE	EJECTOR RETAINER PLATE

MAT'L 4140

SLEEVE EJECTION CORE RETAINER PLATES

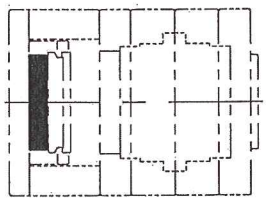

OPTIONAL

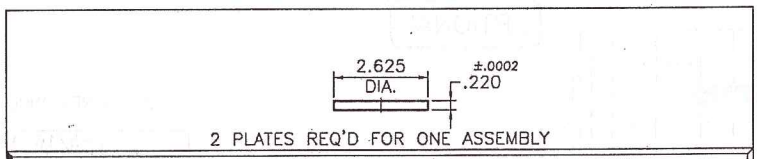

2 PLATES REQ'D FOR ONE ASSEMBLY

MSC-4004

MAT'L 4140

O-RINGS

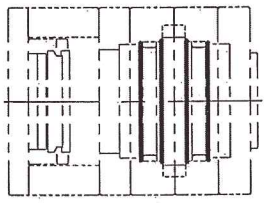

O-RING SET FOR 4" INSERT  SET INCLUDES 2 O-RINGS FOR ONE INSERT BUNA-N	O-RING SET FOR 4" INSERT  SET INCLUDES 2 O-RINGS FOR ONE INSERT VITON - HI TEMP
RMC-4015	**RMC-4017**
2 SETS ARE INCLUDED WITH INSERT SET	ARE AVAILABLE UPON REQUEST

O-RING SET FOR 4" INSERT  PACKAGE OF 10 O-RING SETS BUNA-N	O-RING SET FOR 4" INSERT  PACKAGE OF 4 O-RING SETS VITON - HI TEMP
RMC-4016	**RMC-4018**
ARE AVAILABLE UPON REQUEST	ARE AVAILABLE UPON REQUEST

4" ROUND MATE®

Micro Insert Components

WATER BAFFLE (Packs of 10)

NYLON PLASTIC, NOT FOR HIGH TEMPERATURE APPLICATIONS

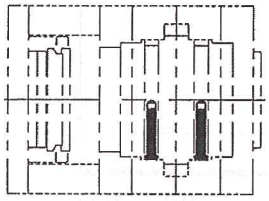

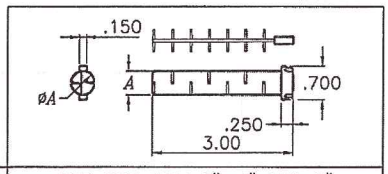

A DIM.	FOR USE WITH 3", 4" AND 6" ROUND MATE INSERTS
.312	RMC-0080
.500	RMC-0081

WATER DAM

1 SUPPLIED WITH EACH INSERT

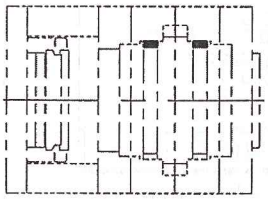

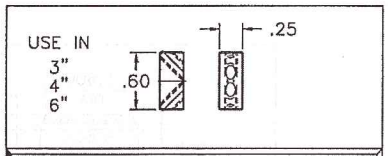

RMC-0010

PACKAGE OF 2 WITH WRENCH AND SAFETY STRAP

MAT'L 416SS

SLEEVE EJECTION SUPPORT PILLAR

OPTIONAL

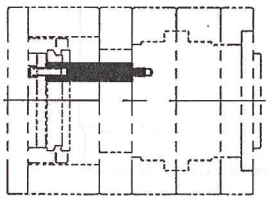

MOLD MAKER MAY TRIM SUPPORT PILLARS TO LENGTH FOR CUSTOM APPLICATIONS

SET SCREW INCLUDED

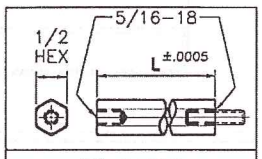

"L"=2.7520
RMC-0020
"L"=3.7520
RMC-0021

MAT'L 1144

www.modularmoldsystems.com Phone: 800-860-3974 419-675-3334 Fax: 419-675-3283

4" ROUND MATE®

Micro Insert Components

MODULAR MOLD SYSTEMS

SAFETY STRAP

1 SUPPLIED WITH EACH INSERT

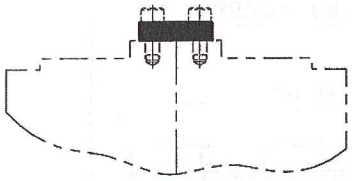

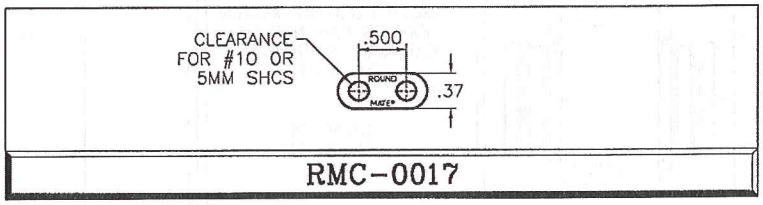

PACKAGE OF 10

MAT'L NYLON

FITTED STORAGE BOX

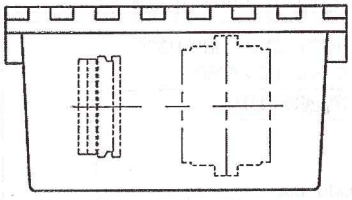

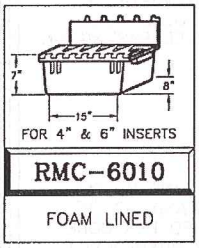

4" ROUND MATE®

Standard Inserts

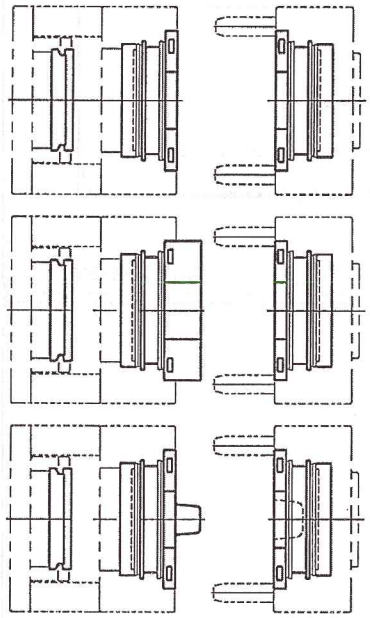

MULTI POSITION MASTER FRAMES CAN NOT USE EXTENDED PARTING LINE ON INSERTS

STANDARD "A" & "B"

STANDARD "A" STAND-UP "B" USED FOR EXTENDED PARTING LINE

STANDARD "A" STAND-UP "B" USED FOR CORE OR INTERLOCKING

AVAILABLE STEEL

* CODE	STEEL
3	P-20 PRE-HARD 32/34 Rc
4	S-7 ANNEALED
5	H-13 ANNEALED
6	420SS ANNEALED
8	420SS PRE-HARD 32/35 Rc

* USE CODE NUMBER ABOVE TO COMPLETE CATALOG NUMBER FOR INSERTS.

GRIND STOCK

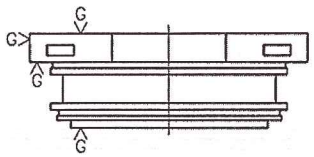

H-13, S-7 & 420SS HEAT TREATABLE INSERTS HAVE .005 GRIND STOCK LEFT ON SURFACES SHOWN FOR GRIND AFTER HEAT TREAT

WATER DAM AND SAFETY STRAP INCLUDED
CORE PLATES ARE REQUIRED

STANDARD INSERT

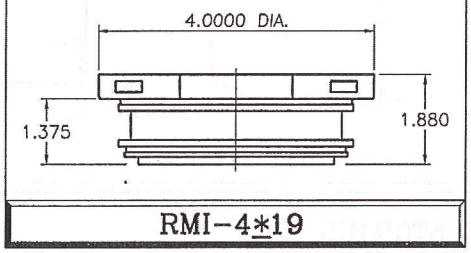

RMI-4*19

* ADD STEEL CODE TO COMPLETE CATALOG NUMBER

WATER DAM AND SAFETY STRAP INCLUDED
CORE PLATES ARE REQUIRED

.100 STAND-UP

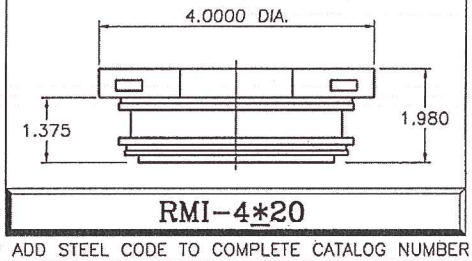

RMI-4*20

* ADD STEEL CODE TO COMPLETE CATALOG NUMBER

WATER DAM AND SAFETY STRAP INCLUDED
CORE PLATES ARE REQUIRED

.500 STAND-UP

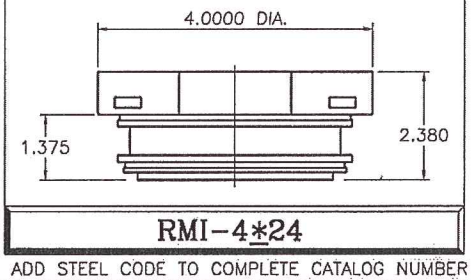

RMI-4*24

* ADD STEEL CODE TO COMPLETE CATALOG NUMBER

WATER DAM AND SAFETY STRAP INCLUDED
CORE PLATES ARE REQUIRED

1.000 STAND-UP

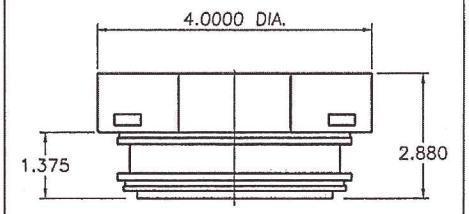

RMI-4*29

* ADD STEEL CODE TO COMPLETE CATALOG NUMBER

www.modularmoldsystems.com Phone: 800-860-3974 419-675-3334 Fax: 419-675-3283

4" ROUND MATE®

Standard Insert Components

MODULAR MOLD SYSTEMS

CORE RETAINER PLATE

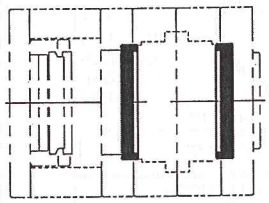

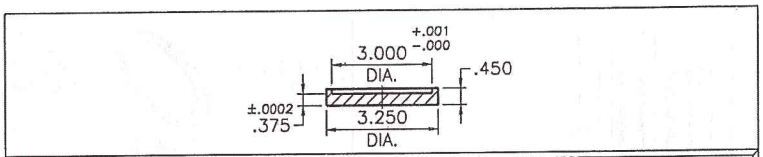

RMC–4001

NOTE: MUST ALWAYS BE USED WITH INSERT.

MAT'L 4140

EJECTOR PLATE ASSEMBLY

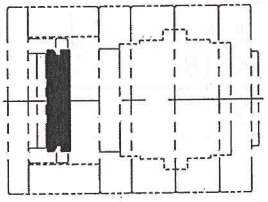

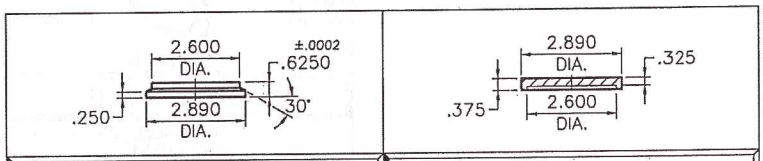

RMC–4003	RMC–4002
EJECTOR PLATE	EJECTOR RETAINER PLATE

MAT'L 4140

QUICK CONNECT EJECTOR PLATE

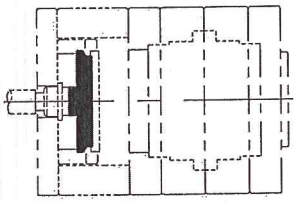

OPTIONAL

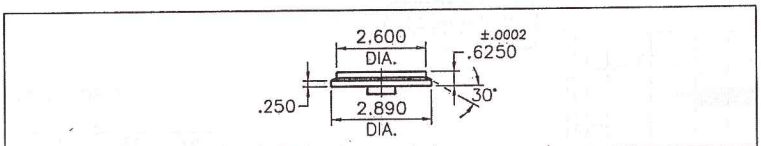

RMC–4006

FOR USE WITH SINGLE POSITION MASTER FRAME

MAT'L 4140

QUICK EJECTOR CONNECT

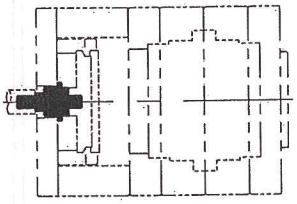

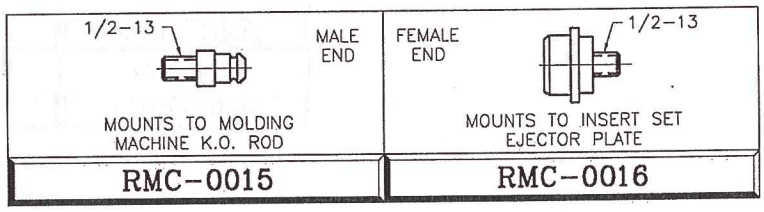

RMC–0015	RMC–0016

SLEEVE EJECTION CORE RETAINER PLATES

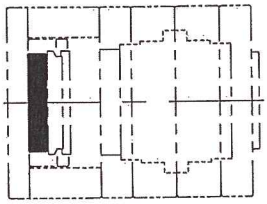

OPTIONAL

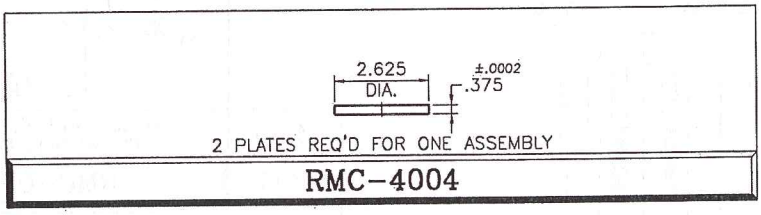

RMC–4004

MAT'L 4140

4" ROUND MATE®

Standard Insert Components

O-RINGS

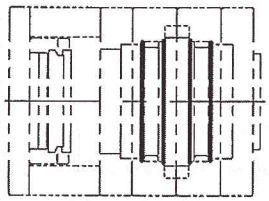

O-RING SET FOR 4" INSERT  SET INCLUDES 2 O-RINGS FOR ONE INSERT BUNA-N	O-RING SET FOR 4" INSERT  SET INCLUDES 2 O-RINGS FOR ONE INSERT VITON – HI TEMP
RMC-4015	RMC-4017
2 SETS ARE INCLUDED WITH INSERT SET	ARE AVAILABLE UPON REQUEST

O-RING SET FOR 4" INSERT  PACKAGE OF 10 O-RING SETS BUNA-N	O-RING SET FOR 4" INSERT  PACKAGE OF 4 O-RING SETS VITON – HI TEMP
RMC-4016	RMC-4018
ARE AVAILABLE UPON REQUEST	ARE AVAILABLE UPON REQUEST

SLEEVE EJECTION SUPPORT PILLAR

OPTIONAL

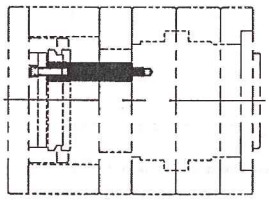

MOLD MAKER MAY TRIM SUPPORT PILLARS TO LENGTH FOR CUSTOM APPLICATIONS

SET SCREW INCLUDED

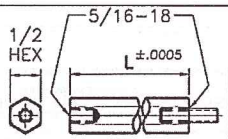	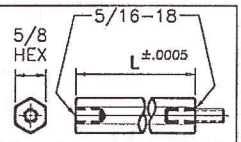
"L"=2.7520	"L"=5.1270
RMC-0020	RMC-0025
"L"=3.7520	"L"=6.1270
RMC-0021	RMC-0027

MAT'L 1144

WATER BAFFLE (Packs of 10)

NYLON PLASTIC, NOT FOR HIGH TEMPERATURE APPLICATIONS

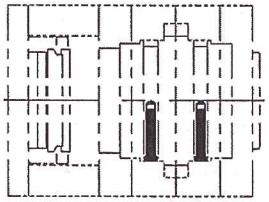

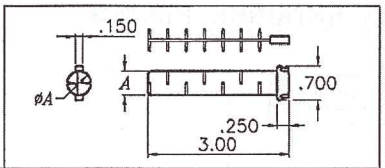

A DIM.	FOR USE WITH 3", 4" AND 6" ROUND MATE INSERTS
.312	RMC-0080
.500	RMC-0081

www.modularmoldsystems.com Phone: 800-860-3974 419-675-3334 Fax: 419-675-3283

4" ROUND MATE®

Standard Insert Components

MODULAR MOLD SYSTEMS

WATER DAM

1 SUPPLIED WITH EACH INSERT

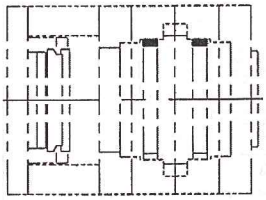

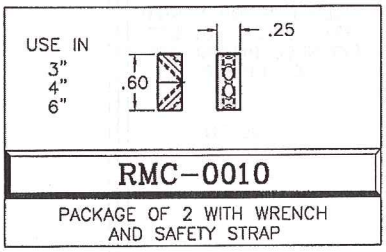

RMC-0010

PACKAGE OF 2 WITH WRENCH AND SAFETY STRAP

MAT'L 416SS

SAFETY STRAP

1 SUPPLIED WITH EACH INSERT

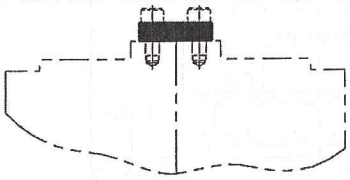

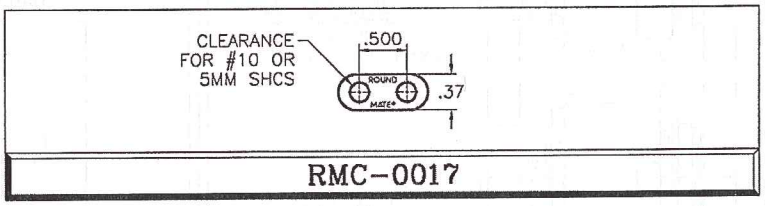

RMC-0017

PACKAGE OF 10

MAT'L NYLON

RETURN PIN EXTENSIONS

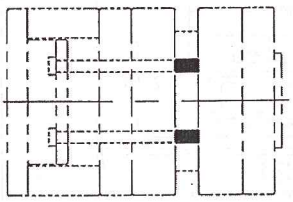

OPTIONAL

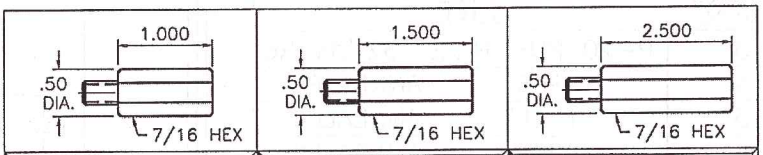

RMC-6040	RMC-6041	RMC-6042

MAT'L 4142

FITTED STORAGE BOX

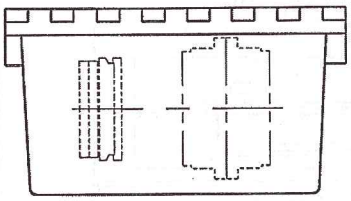

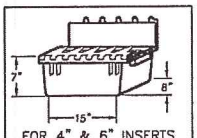

FOR 4" & 6" INSERTS

RMC-6010

FOAM LINED

6" ROUND MATE®

Standard Inserts

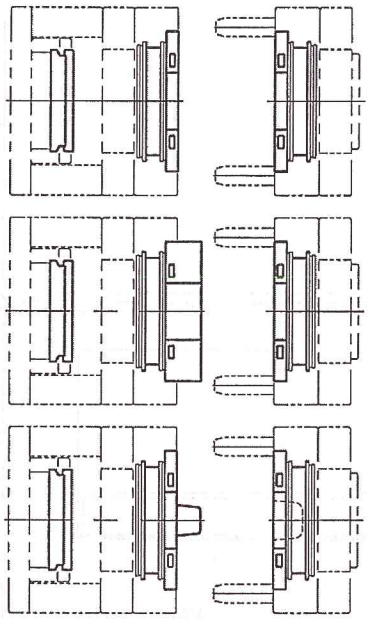

MULTI POSITION MASTER FRAMES CAN NOT USE EXTENDED PARTING LINE ON INSERTS

STANDARD "A" & "B"

STANDARD "A" STAND-UP "B" USED FOR EXTENDED PARTING LINE

STANDARD "A" STAND-UP "B" USED FOR CORE OR INTERLOCKING

WATER DAM AND SAFETY STRAP INCLUDED

STANDARD INSERT

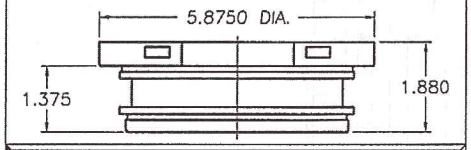

RMI-6*19

* ADD STEEL CODE TO COMPLETE CATALOG NUMBER

WATER DAM AND SAFETY STRAP INCLUDED

.100 STAND-UP

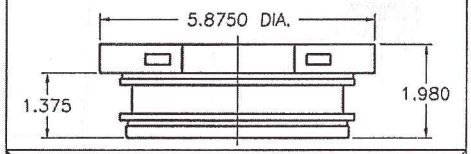

RMI-6*20

* ADD STEEL CODE TO COMPLETE CATALOG NUMBER

AVAILABLE STEEL

* CODE	STEEL
3	P-20 PRE-HARD 32/34 Rc
4	S-7 ANNEALED
5	H-13 ANNEALED
6	420SS ANNEALED
8	420SS PRE-HARD 32/35 Rc

* USE CODE NUMBER ABOVE TO COMPLETE CATALOG NUMBER FOR INSERTS.

WATER DAM AND SAFETY STRAP INCLUDED

.500 STAND-UP

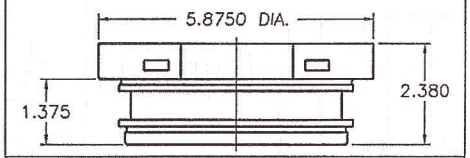

RMI-6*24

* ADD STEEL CODE TO COMPLETE CATALOG NUMBER

GRIND STOCK

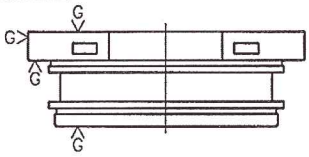

H-13, S-7 & 420SS HEAT TREATABLE INSERTS HAVE .005 GRIND STOCK LEFT ON SURFACES SHOWN FOR GRIND AFTER HEAT TREAT

WATER DAM AND SAFETY STRAP INCLUDED

1.000 STAND-UP

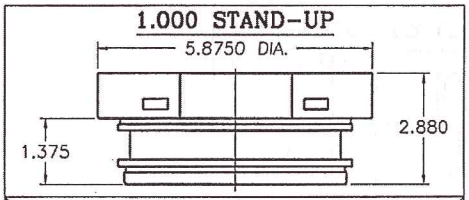

RMI-6*29

* ADD STEEL CODE TO COMPLETE CATALOG NUMBER

WATER DAM AND SAFETY STRAP INCLUDED

1.500 STAND-UP

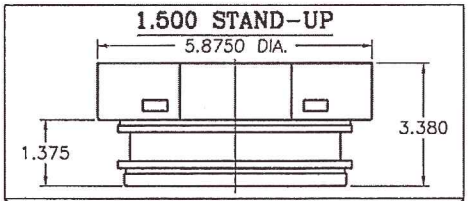

RMI-6*34

* ADD STEEL CODE TO COMPLETE CATALOG NUMBER

www.modularmoldsystems.com Phone: 800-860-3974 419-675-3334 Fax: 419-675-3283

6" ROUND MATE®

Standard Insert Components

MODULAR MOLD SYSTEMS

EJECTOR PLATE ASSEMBLY

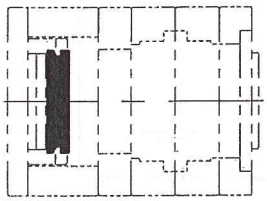

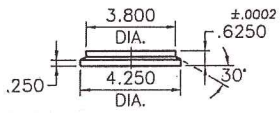

RMC-6003

EJECTOR PLATE

RMC-6002

EJECTOR RETAINER PLATE

MAT'L 4140

QUICK CONNECT EJECTOR PLATE

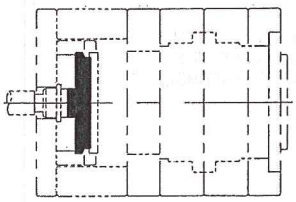

OPTIONAL

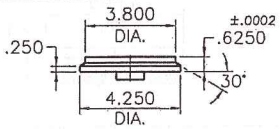

RMC-6006

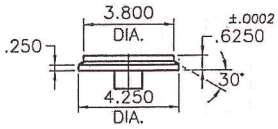

RMC-60061

FOR USE WITH SINGLE POSITION MASTER FRAME

MAT'L 4140

QUICK EJECTOR CONNECT

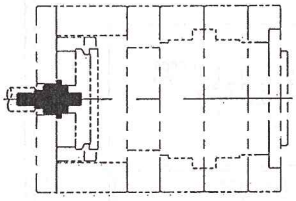

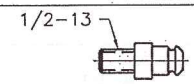

MALE END

MOUNTS TO MOLDING MACHINE K.O. ROD

RMC-0015

FEMALE END

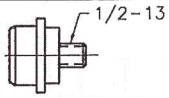

MOUNTS TO INSERT SET EJECTOR PLATE

RMC-0016

CORE RETAINER PLATES

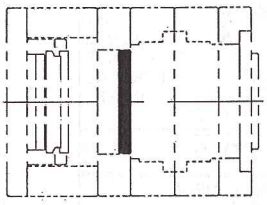

OPTIONAL

ATTACHES TO "B" INSERT TO RETAIN CORE PINS

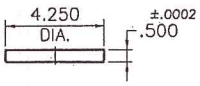

RMC-6005

FOR USE WITH SINGLE POSITION MASTER FRAME

MAT'L 4140

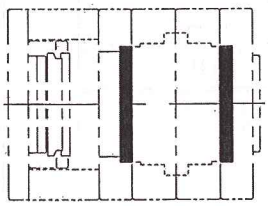

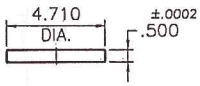

RMC-6001

FOR USE WITH EX MASTER FRAMES

MAT'L 4140

6" ROUND MATE®

Standard Insert Components

SLEEVE EJECTION CORE RETAINER PLATES

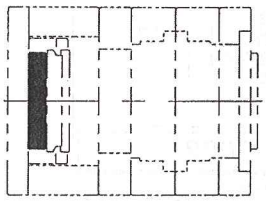

OPTIONAL

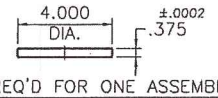

2 PLATES REQ'D FOR ONE ASSEMBLY

RMC-6004

MAT'L 4140

WATER MANIFOLD ASSEMBLY

FOR USE WITH WATER OPTION MASTER FRAME

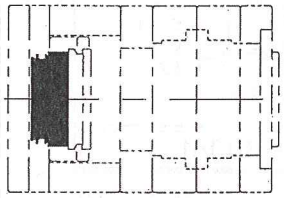

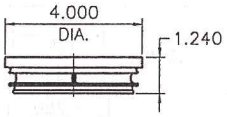

RMC-6081

WATER MANIFOLD PLATE
MAT'L 420 SS

RMC-6004 IS USED WITH RMC-6081 TO MAKE THE WATER MANIFOLD ASSEMBLY

TOP CLAMP PLATE

ATTACHES TO "A" INSERT FOR CUSTOM

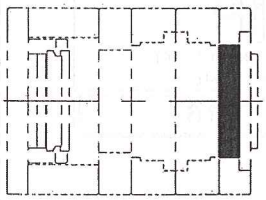

OPTIONAL

REMOVE SPRUE BUSHING DISC/EXT. NOZZLE DISC FROM MASTER FRAME

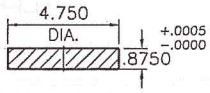

RMC-6007

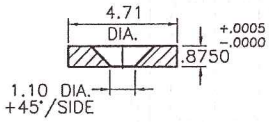

RMC-6008

FOR USE WITH SINGLE POSITION MASTER FRAME

MAT'L 4140

O-RINGS

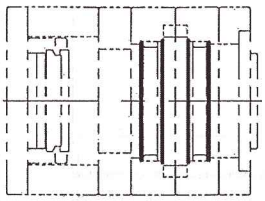

O-RING SET FOR 6" INSERT

SET INCLUDES 2 O-RINGS FOR ONE INSERT

BUNA-N

RMC-6015

2 SETS ARE INCLUDED WITH INSERT SET

O-RING SET FOR 6" INSERT

SET INCLUDES 2 O-RINGS FOR ONE INSERT

VITON - HI TEMP

RMC-6017

ARE AVAILABLE UPON REQUEST

O-RING SET FOR 6" INSERT

PACKAGE OF 10 O-RING SETS

BUNA-N

RMC-6016

ARE AVAILABLE UPON REQUEST

O-RING SET FOR 6" INSERT

PACKAGE OF 4 O-RING SETS

VITON - HI TEMP

RMC-6018

ARE AVAILABLE UPON REQUEST

www.modularmoldsystems.com Phone: 800-860-3974 419-675-3334 Fax: 419-675-3283

6" ROUND MATE®

Standard Insert Components

MODULAR MOLD SYSTEMS

WATER BAFFLE (Packs of 10)

NYLON PLASTIC, NOT FOR HIGH TEMPERATURE APPLICATIONS

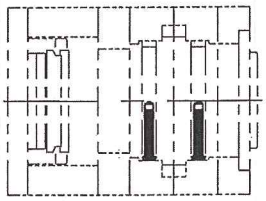

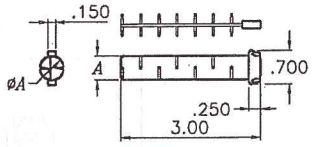

A DIM.	FOR USE WITH 3", 4" AND 6" ROUND MATE INSERTS
.312	RMC-0080
.500	RMC-0081

WATER DAM

1 SUPPLIED WITH EACH INSERT

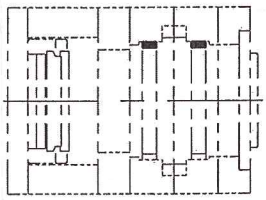

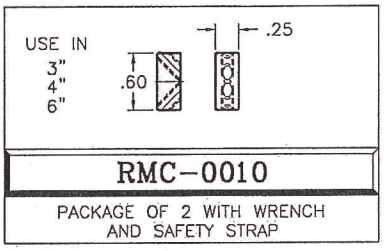

RMC-0010

PACKAGE OF 2 WITH WRENCH AND SAFETY STRAP

MAT'L 416SS

SAFETY STRAP

1 SUPPLIED WITH EACH INSERT

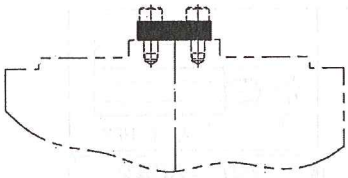

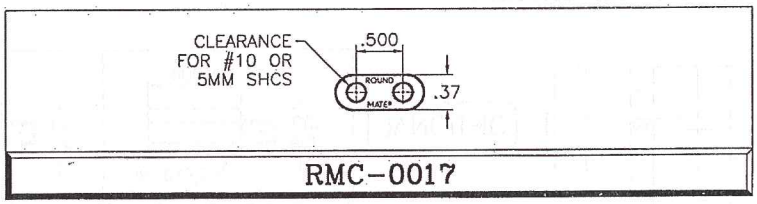

RMC-0017

PACKAGE OF 10

MAT'L NYLON

SLEEVE EJECTION SUPPORT PILLAR

OPTIONAL

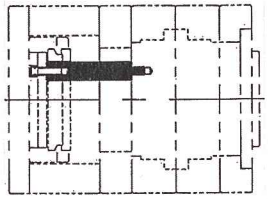

MOLD MAKER MAY TRIM SUPPORT PILLARS TO LENGTH FOR CUSTOM APPLICATIONS

SET SCREW INCLUDED

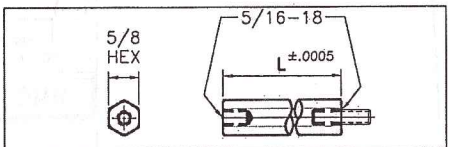

"L"=3.1270	"L"=4.6270
RMC-0022	RMC-0024
"L"=3.6270	"L"=5.1270
RMC-0023	RMC-0025
	"L"=5.6270
	RMC-0026

MAT'L 1144

6" ROUND MATE®

Standard Insert Components

SUPPORT PILLAR

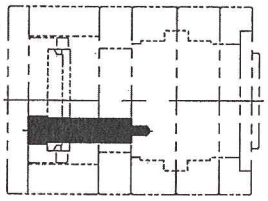

MOLD MAKER MAY TRIM SUPPORT PILLARS TO LENGTH FOR CUSTOM APPLICATIONS

CUSTOM LENGTHS ARE AVAILABLE, CALL FOR QUOTE

SET SCREW INCLUDED

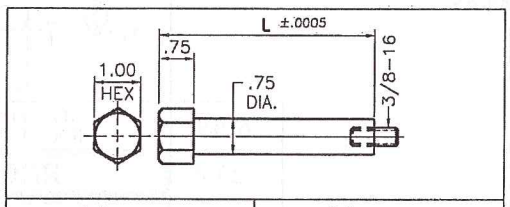

"L"=4.3770	"L"=5.8770
RMC-8060	RMC-8061
	"L"=6.3770
	RMC-8062

RETURN PIN EXTENSIONS

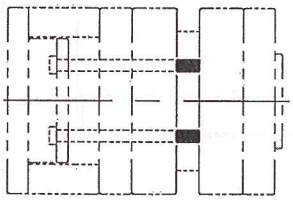

OPTIONAL

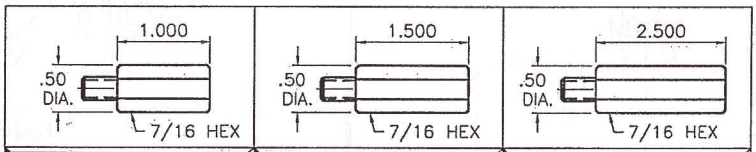

RMC-6040	RMC-6041	RMC-6042

MAT'L 4142

FITTED STORAGE BOX

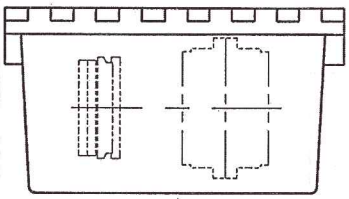

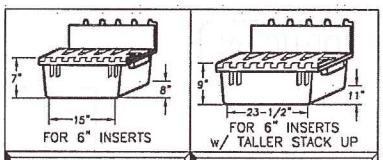

RMC-6010	RMC-6011
FOAM LINED	

www.modularmoldsystems.com Phone: 800-860-3974 419-675-3334 Fax: 419-675-3283

Notes:

8" ROUND MATE®

Standard Inserts

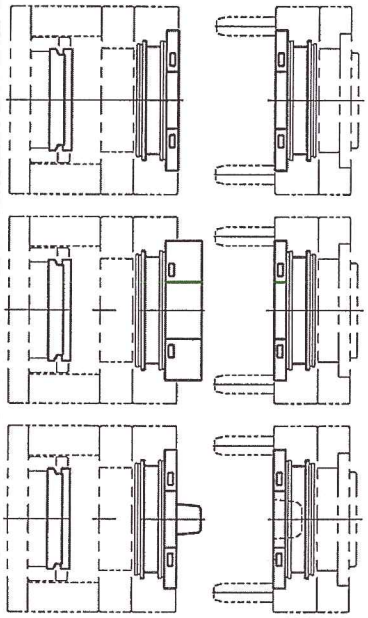

MULTI POSITION MASTER FRAMES CAN NOT USE EXTENDED PARTING LINE ON INSERTS

STANDARD "A" & "B"

STANDARD "A" STAND-UP "B" USED FOR EXTENDED PARTING LINE

STANDARD "A" STAND-UP "B" USED FOR CORE OR INTERLOCKING

WATER DAM AND SAFETY STRAP INCLUDED

STANDARD INSERT

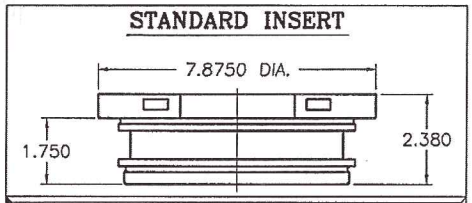

RMI-8*24

* ADD STEEL CODE TO COMPLETE CATALOG NUMBER

WATER DAM AND SAFETY STRAP INCLUDED

.100 STAND-UP

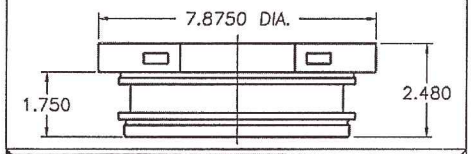

RMI-8*25

* ADD STEEL CODE TO COMPLETE CATALOG NUMBER

AVAILABLE STEEL

* CODE	STEEL
3	P-20 PRE-HARD 32/34 Rc
4	S-7 ANNEALED
5	H-13 ANNEALED
6	420SS ANNEALED
8	420SS PRE-HARD 32/35 Rc

* USE CODE NUMBER ABOVE TO COMPLETE CATALOG NUMBER FOR INSERTS.

WATER DAM AND SAFETY STRAP INCLUDED

.500 STAND-UP

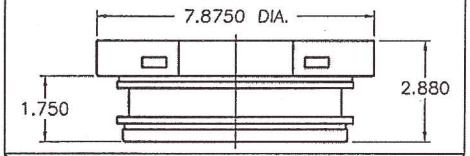

RMI-8*29

* ADD STEEL CODE TO COMPLETE CATALOG NUMBER

GRIND STOCK

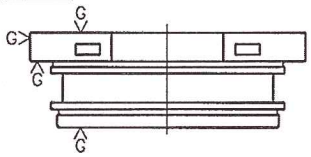

H-13, S-7 & 420SS HEAT TREATABLE INSERTS HAVE .005 GRIND STOCK LEFT ON SURFACES SHOWN FOR GRIND AFTER HEAT TREAT

WATER DAM AND SAFETY STRAP INCLUDED

1.000 STAND-UP

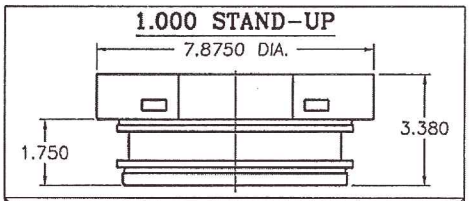

RMI-8*34

* ADD STEEL CODE TO COMPLETE CATALOG NUMBER

WATER DAM AND SAFETY STRAP INCLUDED

1.500 STAND-UP

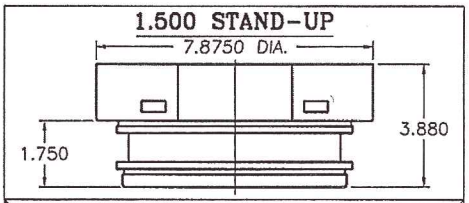

RMI-8*39

* ADD STEEL CODE TO COMPLETE CATALOG NUMBER

www.modularmoldsystems.com Phone: 800-860-3974 419-675-3334 Fax: 419-675-3283

8" ROUND MATE®

Standard Insert Components

MODULAR MOLD SYSTEMS

EJECTOR PLATE ASSEMBLY

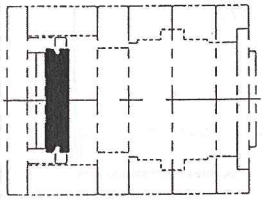

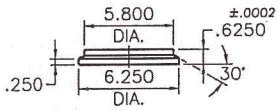

RMC-8003

EJECTOR PLATE

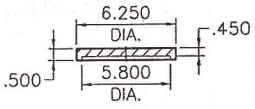

RMC-8002

EJECTOR RETAINER PLATE

MAT'L 4140

QUICK CONNECT EJECTOR PLATE

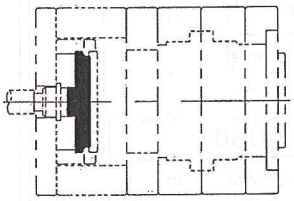

OPTIONAL

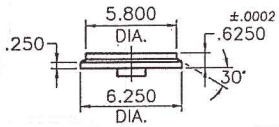

RMC-8006

FOR USE WITH SINGLE POSITION MASTER FRAME

MAT'L 4140

QUICK EJECTOR CONNECT

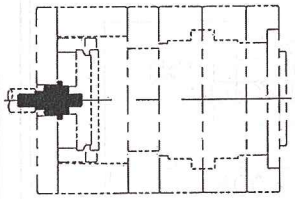

OPTIONAL

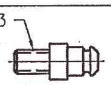

MALE END

MOUNTS TO MOLDING MACHINE K.O. ROD

RMC-0015

FEMALE END

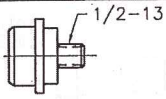

MOUNTS TO INSERT SET EJECTOR PLATE

RMC-0016

CORE RETAINER PLATES

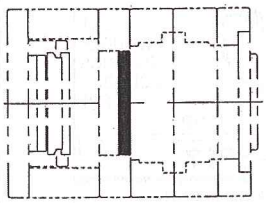

OPTIONAL

ATTACHES TO "B" INSERT TO RETAIN CORE PINS.

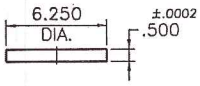

RMC-8005

FOR USE WITH SINGLE POSITION MASTER FRAME

MAT'L 4140

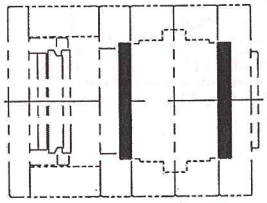

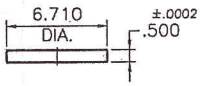

RMC-8001

FOR USE WITH EX MASTER FRAMES

MAT'L 4140

8" ROUND MATE®

Standard Insert Components

SLEEVE EJECTION CORE RETAINER PLATES

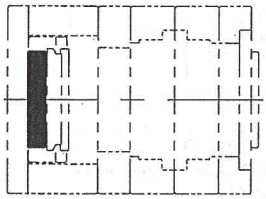

OPTIONAL

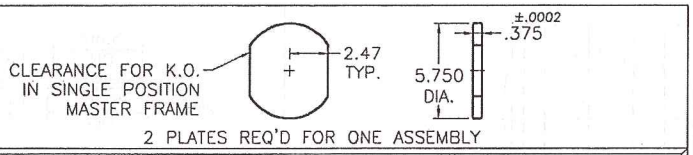

2 PLATES REQ'D FOR ONE ASSEMBLY

RMC-8004

MAT'L 4140

WATER MANIFOLD ASSEMBLY

FOR USE WITH WATER OPTION MASTER FRAME

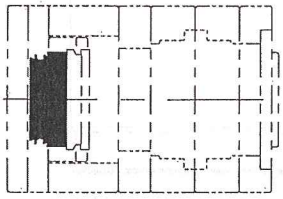

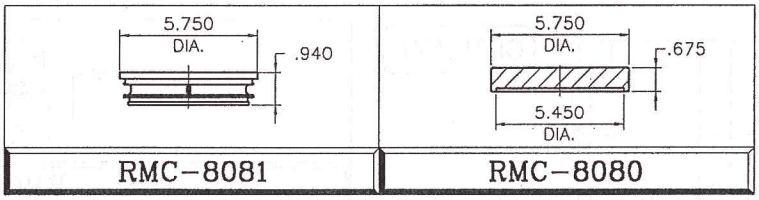

RMC-8081	RMC-8080
WATER MANIFOLD PLATE MAT'L 420 SS	WATER CORE RETAINER PLATE MAT'L 4140

TOP CLAMP PLATE

ATTACHES TO "A" INSERT FOR CUSTOM

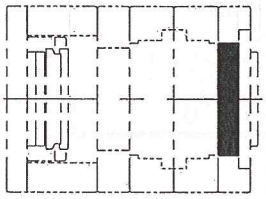

OPTIONAL

REMOVE SPRUE BUSHING DISC/EXT. NOZZLE DISC FROM MASTER FRAME

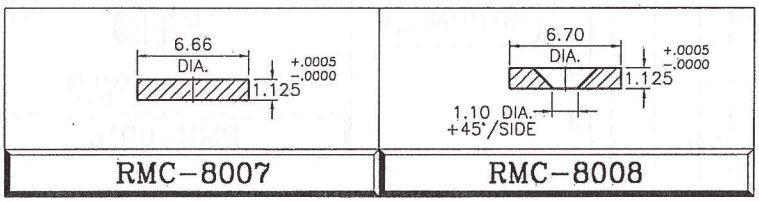

RMC-8007	RMC-8008

FOR USE WITH SINGLE POSITION MASTER FRAME

MAT'L 4140

O-RINGS

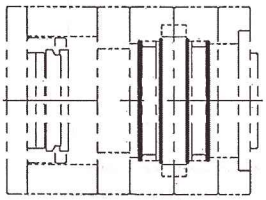

O-RING SET FOR 8" INSERT  SET INCLUDES 2 O-RINGS FOR ONE INSERT BUNA-N	O-RING SET FOR 8" INSERT  SET INCLUDES 2 O-RINGS FOR ONE INSERT VITON – HI TEMP
RMC-8015	**RMC-8017**
2 SETS ARE INCLUDED WITH INSERT SET	ARE AVAILABLE UPON REQUEST
O-RING SET FOR 8" INSERT  PACKAGE OF 10 O-RING SETS BUNA-N	O-RING SET FOR 8" INSERT  PACKAGE OF 4 O-RING SETS VITON – HI TEMP
RMC-8016	**RMC-8018**
ARE AVAILABLE UPON REQUEST	ARE AVAILABLE UPON REQUEST

www.modularmoldsystems.com Phone: 800-860-3974 419-675-3334 Fax: 419-675-3283

8" ROUND MATE®

Standard Insert Components

MODULAR MOLD SYSTEMS

WATER BAFFLE (Packs of 10)

NYLON PLASTIC, NOT FOR HIGH TEMPERATURE APPLICATIONS

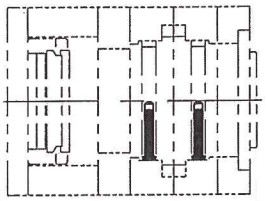

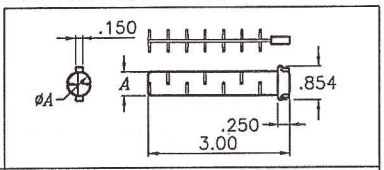

A DIM.	FOR USE WITH 8" ROUND MATE INSERT
.312	RMC-0085
.500	RMC-0086

WATER DAM

1 SUPPLIED WITH EACH INSERT

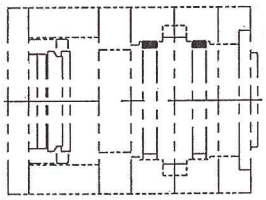

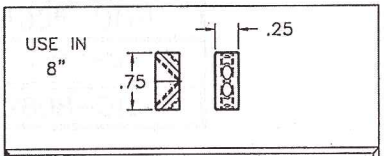

RMC-0011

PACKAGE OF 2 WITH WRENCH AND SAFETY STRAP

MAT'L 416SS

SAFETY STRAP

1 SUPPLIED WITH EACH INSERT

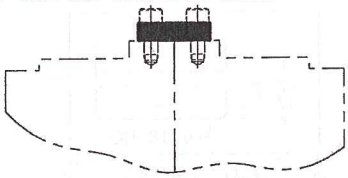

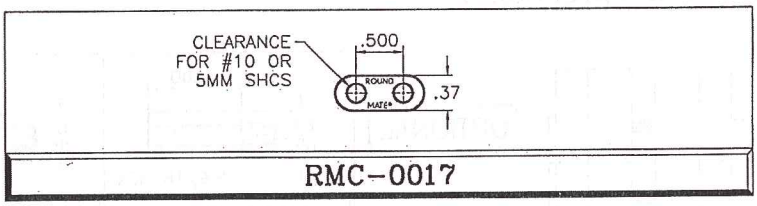

RMC-0017

PACKAGE OF 10

MAT'L NYLON

SLEEVE EJECTION SUPPORT PILLAR

OPTIONAL

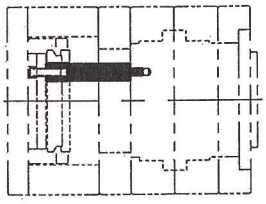

MOLD MAKER MAY TRIM SUPPORT PILLARS TO LENGTH FOR CUSTOM APPLICATIONS

SET SCREW INCLUDED

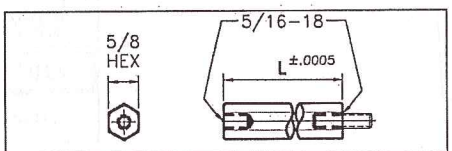

"L"=3.6270	"L"=5.6270
RMC-0023	RMC-0026
"L"=4.6270	"L"=6.1270
RMC-0024	RMC-0027
"L"=5.1270	"L"=6.6270
RMC-0025	RMC-0028

MAT'L 1144

8" ROUND MATE®

Standard Insert Components

SUPPORT PILLAR

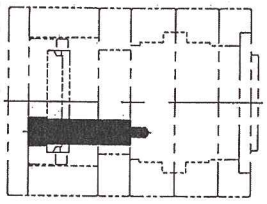

MOLD MAKER MAY TRIM SUPPORT PILLARS TO LENGTH FOR CUSTOM APPLICATIONS

CUSTOM LENGTHS ARE AVAILABLE, CALL FOR QUOTE

SET SCREW INCLUDED

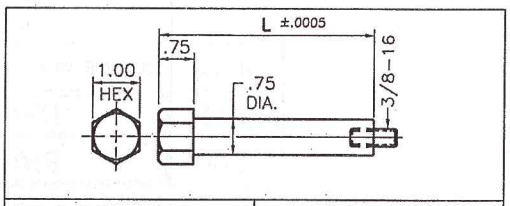

"L"=5.8770	"L"=6.8770
RMC-8061	RMC-8063
"L"=6.3770	"L"=7.3770
RMC-8062	RMC-8064

RETURN PIN EXTENSIONS

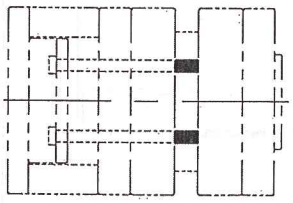

OPTIONAL

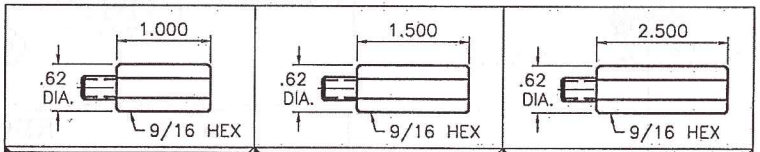

RMC-8040	RMC-8041	RMC-8042

MAT'L 4142

FITTED STORAGE BOX

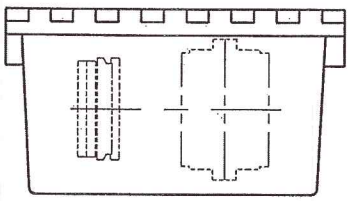

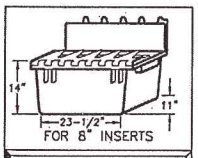

RMC-8010

FOAM LINED

www.modularmoldsystems.com Phone: 800-860-3974 419-675-3334 Fax: 419-675-3283

MODULAR MOLD SYSTEMS

CRS CAVITY-READY SERIES

Section Five

Cavity Ready Components

MODULAR MOLD SYSTEMS

Notes:

www.modularmoldsystems.com Phone: 800-860-3974 419-675-3334 Fax: 419-675-3283

Round Mate
Butterfly Slide Assemblies

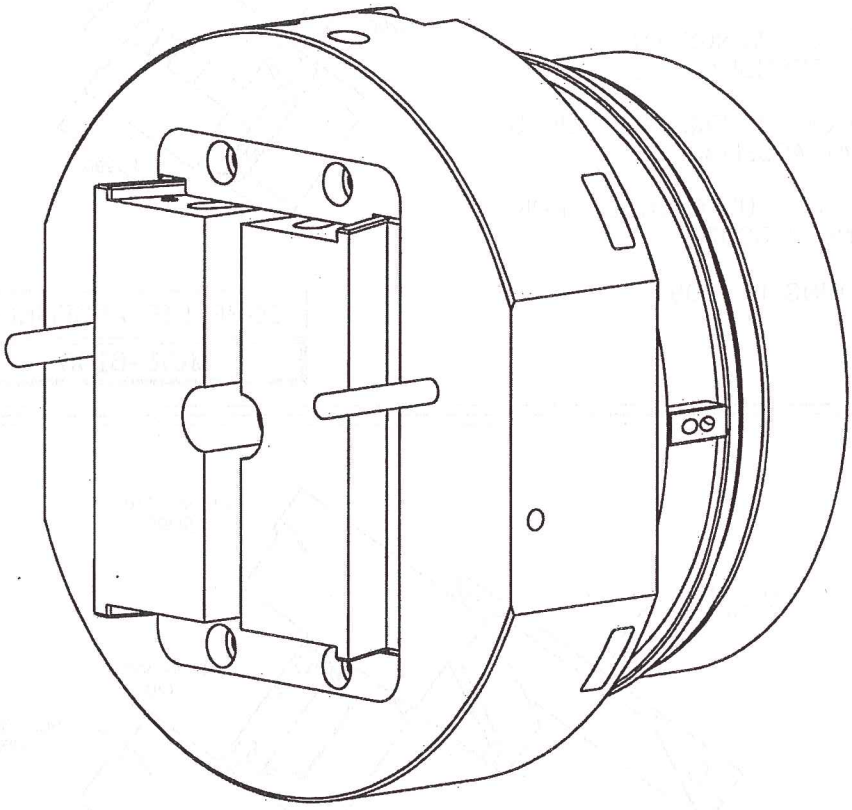

6" Round Mate Single Slide Assembly

SINGLE "BUTTERFLY SLIDE" ASSEMBLY

- ROUND MATE INSERT 420 SS (Rc 32–35)
- TOP CLAMP PLATE 4140
- GUIDE PIN
- HARDENED S–7 SLIDES (Rc 54–56)
- SPRING ACTIVATED SLIDES
- COMPLETE, READY FOR CAVITY DETAIL
- ACTUATOR PINS & SPRINGS ARE INCLUDED WITH ASSEMBLY
- .003 GRIND STOCK ON FACE OF SLIDES FOR FINAL FIT AT ASSEMBLY
- PRE–FIT SLIDES CAN BE QUOTED UPON REQUEST GROUND ±.0002
- MAX SLIDE OPENING IS .509

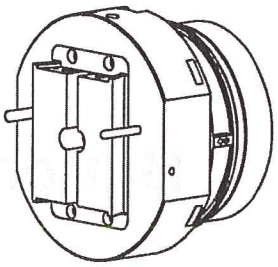

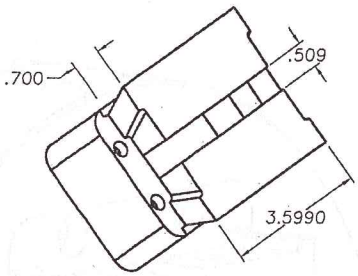

COMPLETE ASSEMBLY

MCR–6100

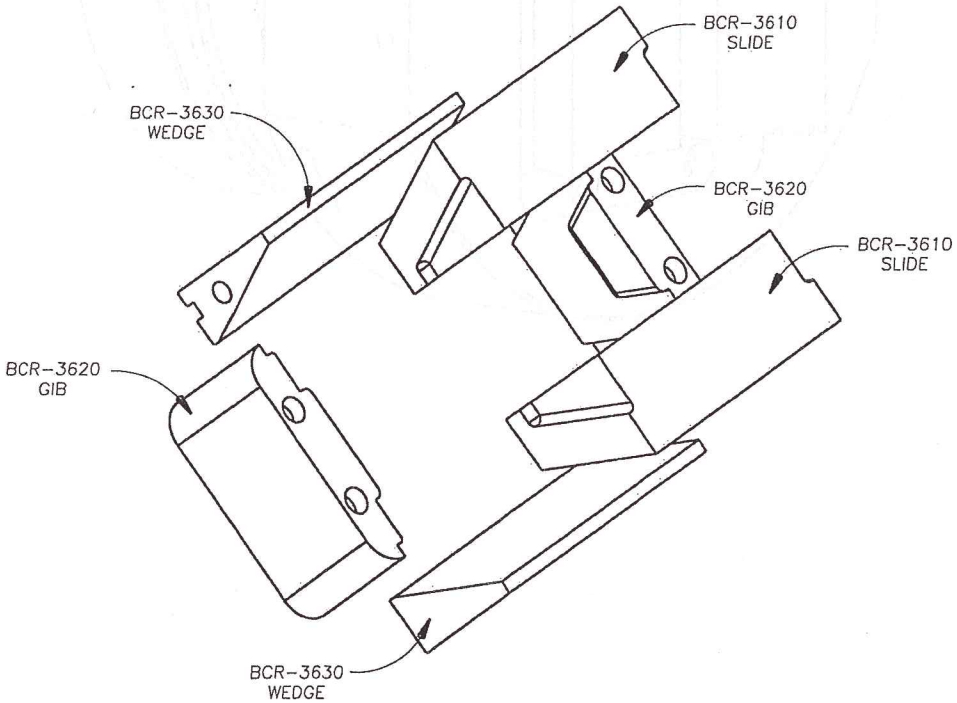

www.modularmoldsystems.com Phone: 800-860-3974 419-675-3334 Fax: 419-675-3283

6" Single Slide Components

CAVITY-READY SERIES

MODULAR MOLD SYSTEMS

CAVITY READY SLIDE

SINGLE SLIDE ASSEMBLY

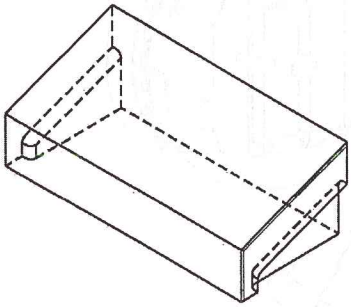

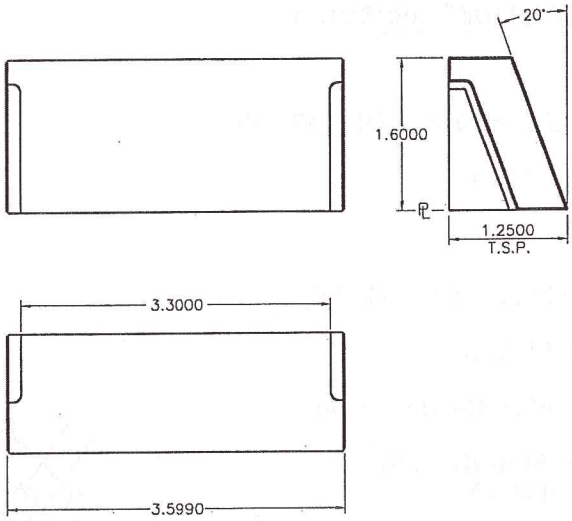

.003 GRIND STOCK ON FACE OF SLIDES FOR FINAL FIT AT ASSEMBLY

PRE-FIT SLIDES CAN BE QUOTED UPON REQUEST GROUND ±.0002

MAT'L S-7 Rc 54-56

BCR-3610

SLIDE GIB

SINGLE SLIDE ASSEMBLY

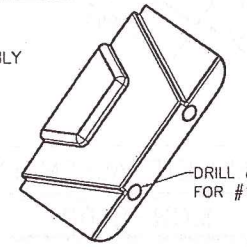

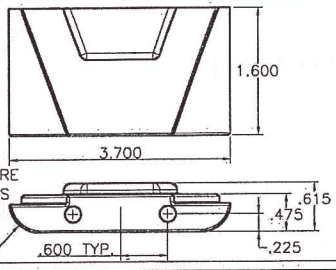

MAT'L 1018

BCR-3620

END WEDGE

SINGLE SLIDE ASSEMBLY

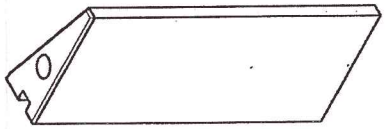

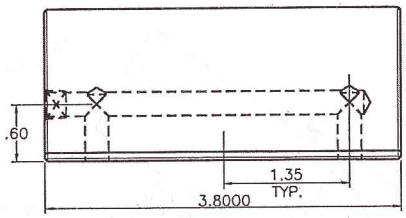

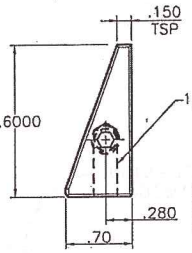

MAT'L 1018

BCR-3630

SPRING PUSH PIN

SINGLE SLIDE ASSEMBLY

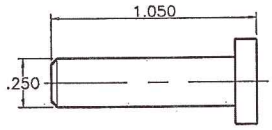

CCR-0101

SPRING

SINGLE SLIDE ASSEMBLY

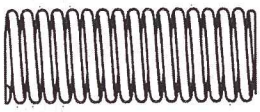

1/2 DIA. x 2" MEDIUM DUTY SPRING

M05M20

8" Round Mate Single Slide Assembly

SINGLE "BUTTERFLY SLIDE" ASSEMBLY

- ROUND MATE INSERT 420 SS (Rc 32–35)
- TOP CLAMP PLATE 4140
- GUIDE PIN
- HARDENED S–7 SLIDES (Rc 54–56)
- SPRING ACTIVATED SLIDES
- COMPLETE, READY FOR CAVITY DETAIL
- ACTUATOR PINS & SPRINGS ARE INCLUDED WITH ASSEMBLY
- .003 GRIND STOCK ON FACE OF SLIDES FOR FINAL FIT AT ASSEMBLY
- PRE–FIT SLIDES CAN BE QUOTED UPON REQUEST GROUND ±.0002
- MAX SLIDE OPENING IS .509

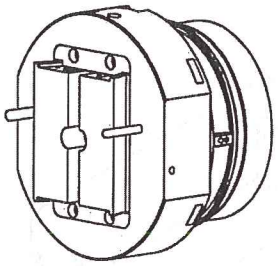

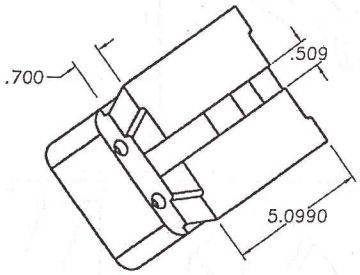

COMPLETE ASSEMBLY
MCR–8100

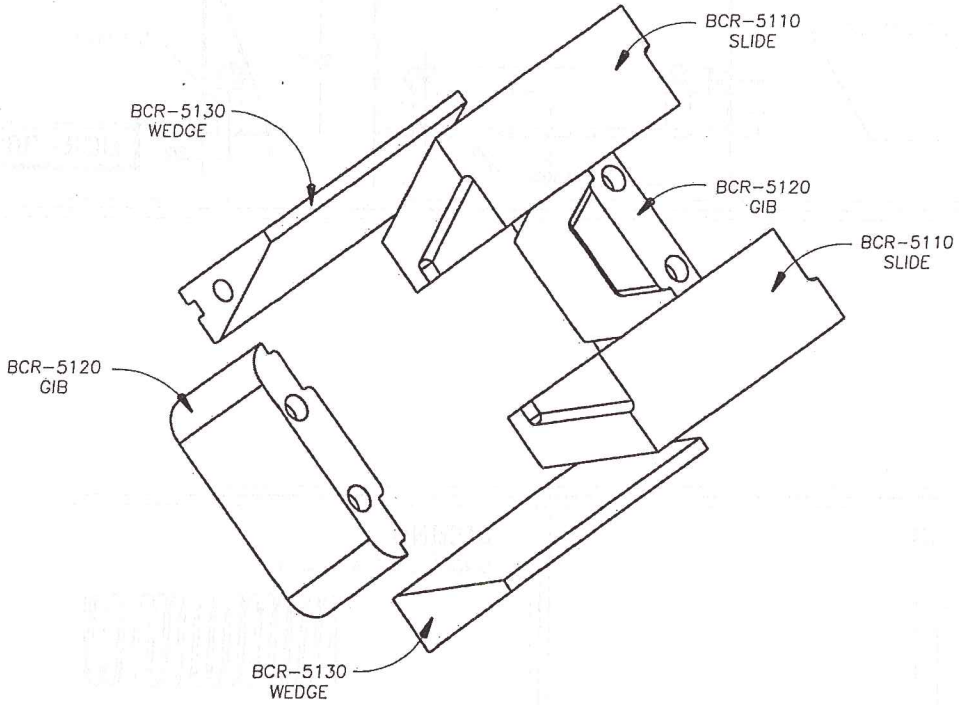

www.modularmoldsystems.com Phone: 800-860-3974 419-675-3334 Fax: 419-675-3283

8" Single Slide Components

CAVITY-READY SERIES

MODULAR MOLD SYSTEMS

CAVITY READY SLIDE

SINGLE SLIDE ASSEMBLY

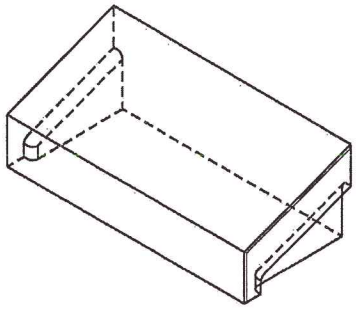

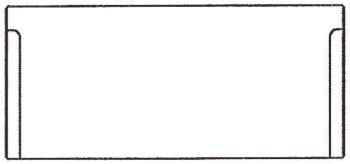

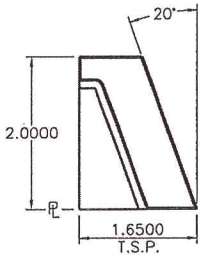

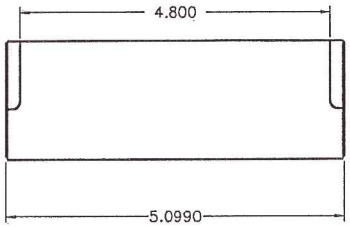

.003 GRIND STOCK ON FACE OF SLIDES FOR FINAL FIT AT ASSEMBLY

PRE-FIT SLIDES CAN BE QUOTED UPON REQUEST GROUND ±.0002

MAT'L S-7 Rc 54-56

BCR-5110

SLIDE GIB

SINGLE SLIDE ASSEMBLY

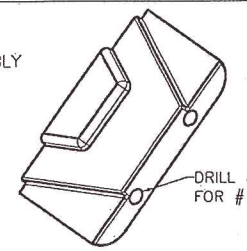

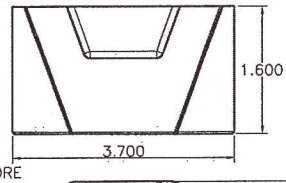

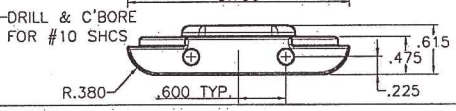

MAT'L 1018

BCR-5120

END WEDGE

SINGLE SLIDE ASSEMBLY

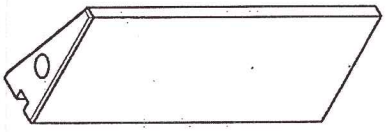

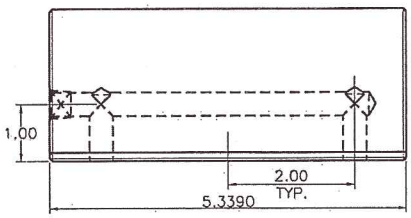

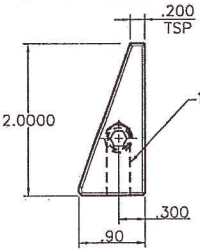

MAT'L 1018

BCR-5130

SPRING PUSH PIN

SINGLE SLIDE ASSEMBLY

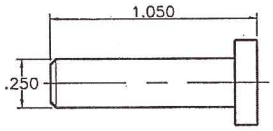

CCR-0101

SPRING

SINGLE SLIDE ASSEMBLY

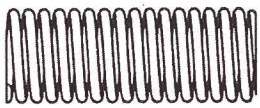

1/2 DIA. x 2" MEDIUM DUTY SPRING

M05M20

MODULAR MOLD SYSTEMS

Notes:

www.modularmoldsystems.com Phone: 800-860-3974 419-675-3334 Fax: 419-675-3283

Hot Manifold Systems

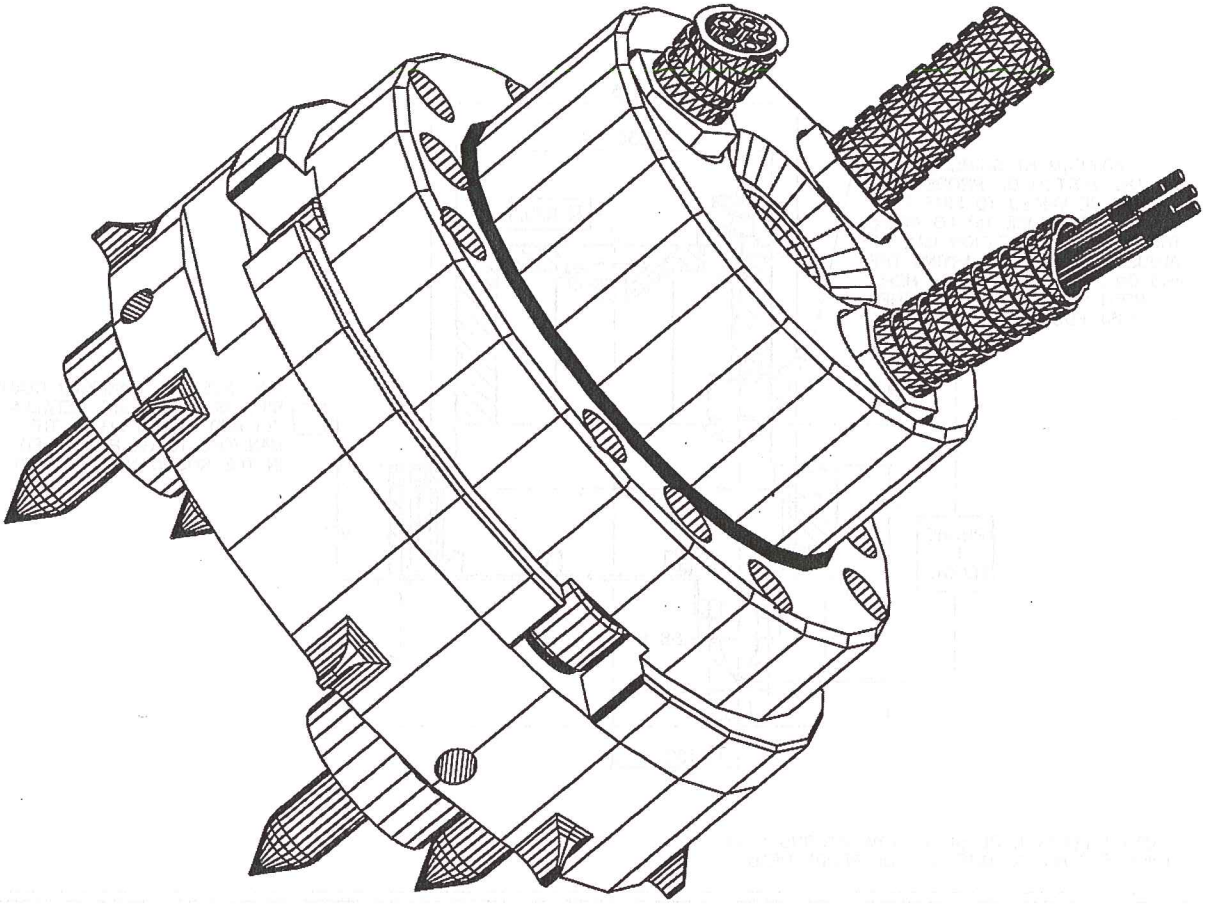

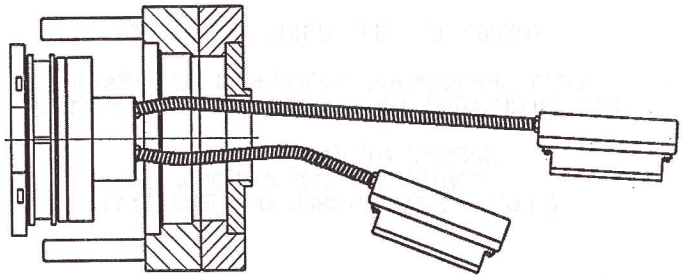

6" Round Mate Hot Manifold

6" HOT MANIFOLD SYSTEM

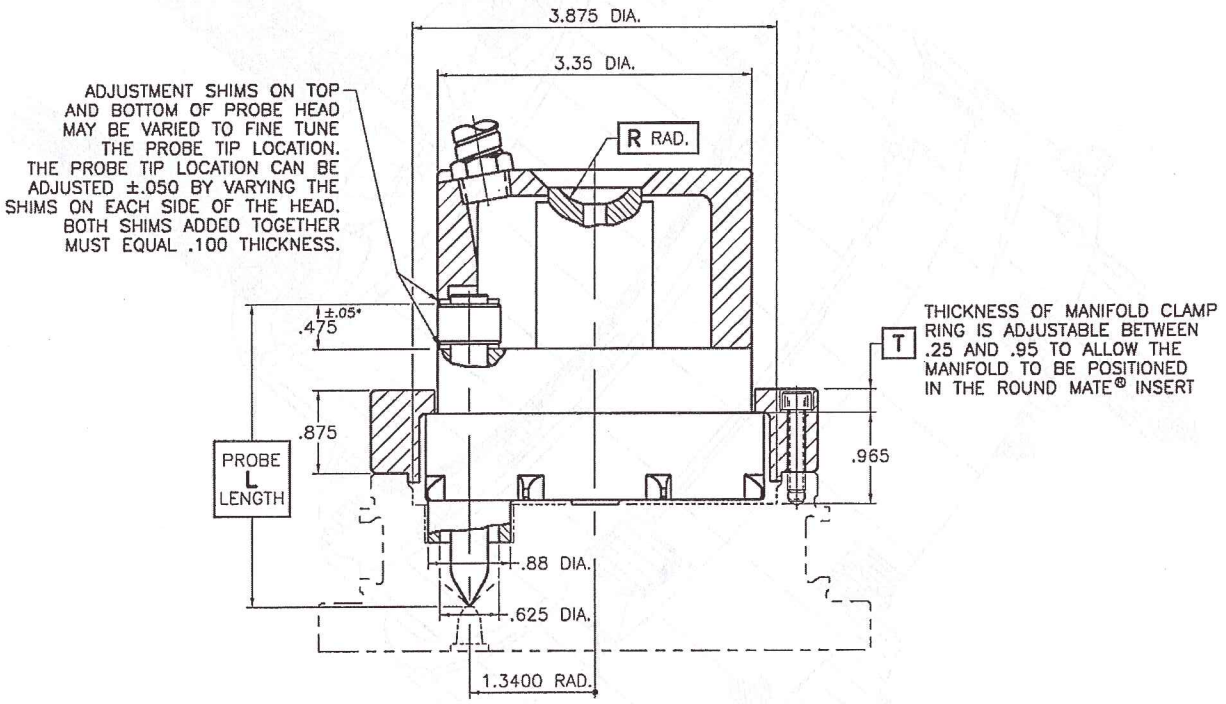

* ±.050 TOLERANCE RESULTS FROM SHIFTING SHIM THICKNESS ALL TO ONE SIDE OF PROBE HEAD.

WHEN ORDERING

WHEN ORDERING A MANIFOLD ASSEMBLY, SPECIFY CATALOG NUMBER FOR DESIRED NUMBER OF PROBES.

SPECIFY PLUS OR MINUS "G" GATE LOCATION FROM DATUM LEVEL.

SPECIFY DESIRED SPRUE RADIUS "R".

SPECIFY APPROXIMATE PROCESSING TEMPERATURE FOR CALCULATING THERMAL EXPANSION OF PROBE.

SPECIFY THE REQ'D TYPE OF CONTROLLER CONNECTIONS. (REQ'D ZONES=NUMBER OF PROBES+1)

HOT MANIFOLD CONSISTS OF:

- BODY – CAP – CLAMP RING
- PROBES – BODY HEATERS – THERMOCOUPLES
- CHOICE OF CONTROLLER INPUT CONNECTORS
- ENGINEERING DRAWING PACKAGE

THE HOT MANIFOLD WILL BE SUPPLIED ASSEMBLED AND PRE-WIRED READY TO FIT INTO THE CUSTOMERS PARTICULAR APPLICATION.

www.modularmoldsystems.com Phone: 800-860-3974 419-675-3334 Fax: 419-675-3283

6" Hot Manifold Design Specifications

CAVITY-READY SERIES

MODULAR MOLD SYSTEMS

RECOMMENDED MINIMUM GATE LEVEL

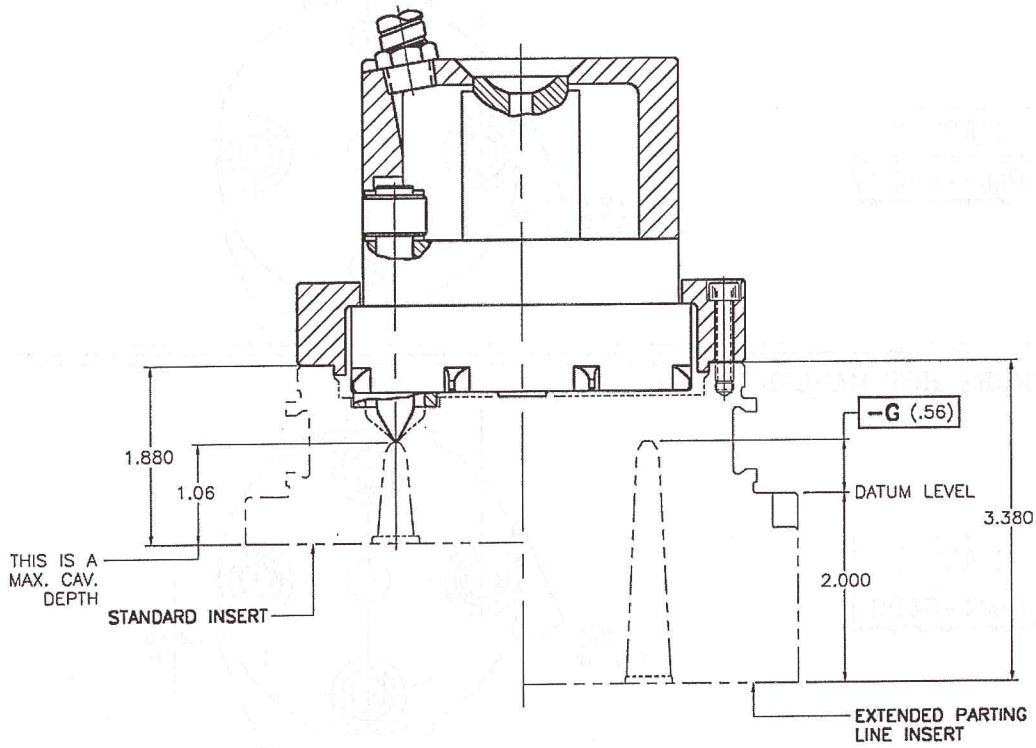

RECOMMENDED MAXIMUM GATE LEVEL

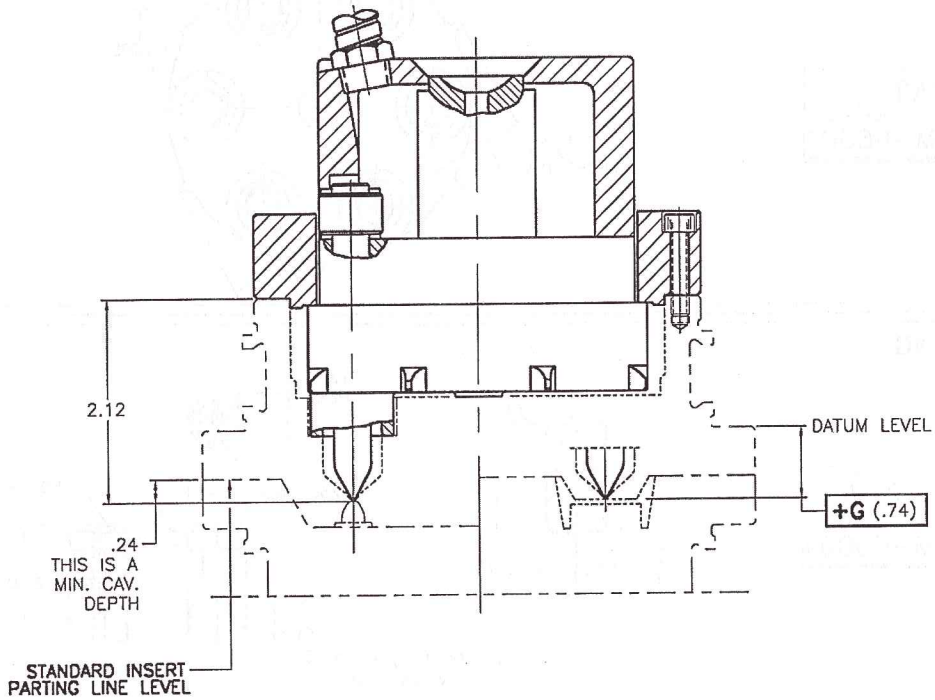

6" Hot Manifold Components

6" TWO PROBE HOT MANIFOLD

CAT #
RMM-6200

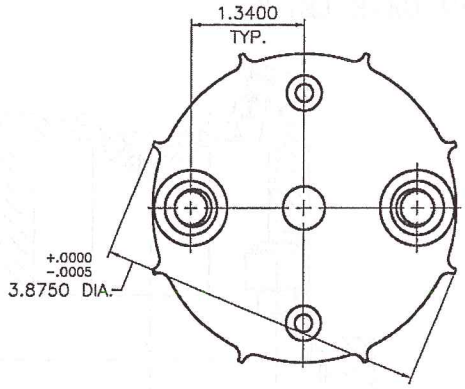

6" FOUR PROBE HOT MANIFOLD

CAT #
RMM-6400

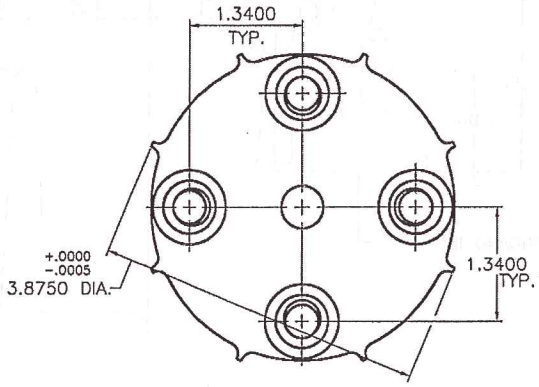

6" SIX PROBE HOT MANIFOLD

CAT #
RMM-6600

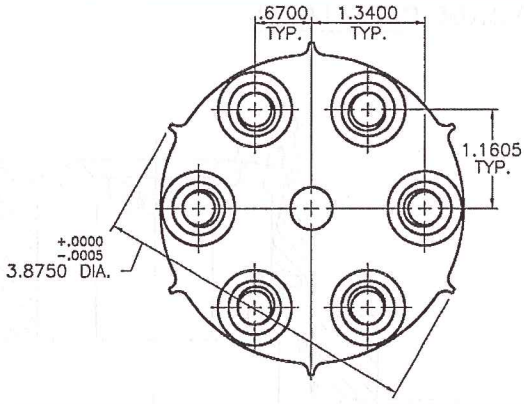

NOZZLE BUSHING

CAT #
RMM-6000

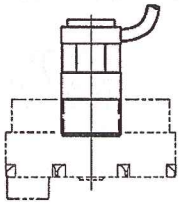

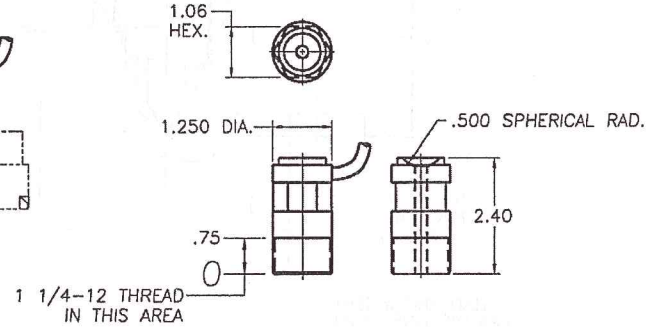

www.modularmoldsystems.com Phone: 800-860-3974 419-675-3334 Fax: 419-675-3283

6" Hot Manifold Components

CAVITY-READY SERIES

MODULAR MOLD SYSTEMS

6" HOT MANIFOLD PROBE

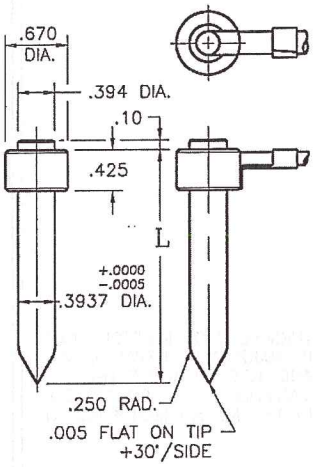

CAT #	L	VOLTS	WATTS	CAT #	L	VOLTS	WATTS
RMM-8020	2.150	240	160	RMM-8027	3.200	240	190
RMM-8021	2.300	240	160	RMM-8028	3.350	240	210
RMM-8022	2.450	240	160	RMM-8029	3.500	240	215
RMM-8023	2.600	240	160	RMM-8030	3.650	240	225
RMM-8024	2.750	240	165	RMM-8031	3.800	240	235
RMM-8025	2.900	240	170	RMM-8032	3.950	240	245
RMM-8026	3.050	240	180				

MAT'L D-2
HDN. Rc 44

ADJUSTMENT SHIM

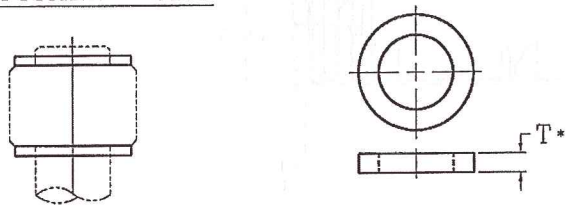

CAT #	T
RMM-0110	.06
RMM-0111	.11

SOLD IN PACKAGES OF 10

* OVERSIZE FOR ADJUSTMENT

PROBE THERMOCOUPLE

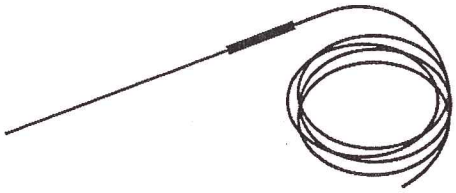

TYPE J

CAT #
RMM-0100

REGISTER RING

OPTIONAL

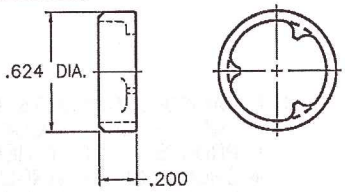

CAT #
RMM-0130

* MUST BE ORDERED SEPARATELY

CONDUIT

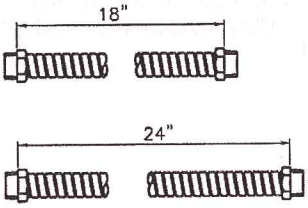

LENGTH	CAT #
18"	RMM-0124
24"	RMM-0120

8" Round Mate Hot Manifold

8" HOT MANIFOLD SYSTEM

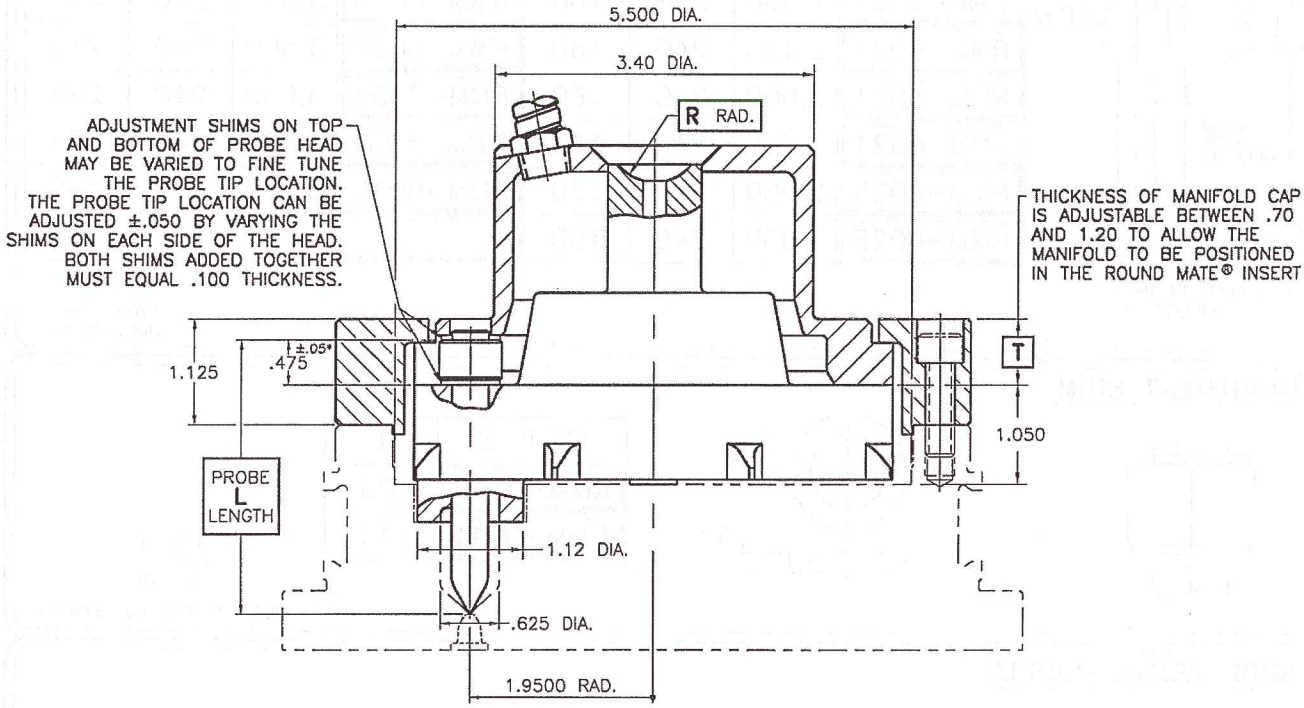

* ±.050 TOLERANCE RESULTS FROM SHIFTING SHIM THICKNESS ALL TO ONE SIDE OF PROBE HEAD.

WHEN ORDERING

WHEN ORDERING A MANIFOLD ASSEMBLY, SPECIFY CATALOG NUMBER FOR DESIRED NUMBER OF PROBES.

SPECIFY PLUS OR MINUS "G" GATE LOCATION FROM DATUM LEVEL.

SPECIFY DESIRED SPRUE RADIUS "R".

SPECIFY APPROXIMATE PROCESSING TEMPERATURE FOR CALCULATING THERMAL EXPANSION OF PROBE.

SPECIFY THE REQ'D TYPE OF CONTROLLER CONNECTIONS. (REQ'D ZONES=NUMBER OF PROBES+1)

HOT MANIFOLD CONSISTS OF:

- BODY – CAP – CLAMP RING
- PROBES – BODY HEATERS – THERMOCOUPLES
- CHOICE OF CONTROLLER INPUT CONNECTORS
- ENGINEERING DRAWING PACKAGE

THE HOT MANIFOLD WILL BE SUPPLIED ASSEMBLED AND PRE–WIRED READY TO FIT INTO THE CUSTOMERS PARTICULAR APPLICATION.

8" Hot Manifold Design Specifications

CAVITY-READY SERIES

MODULAR MOLD SYSTEMS

RECOMMENDED MINIMUM GATE LEVEL

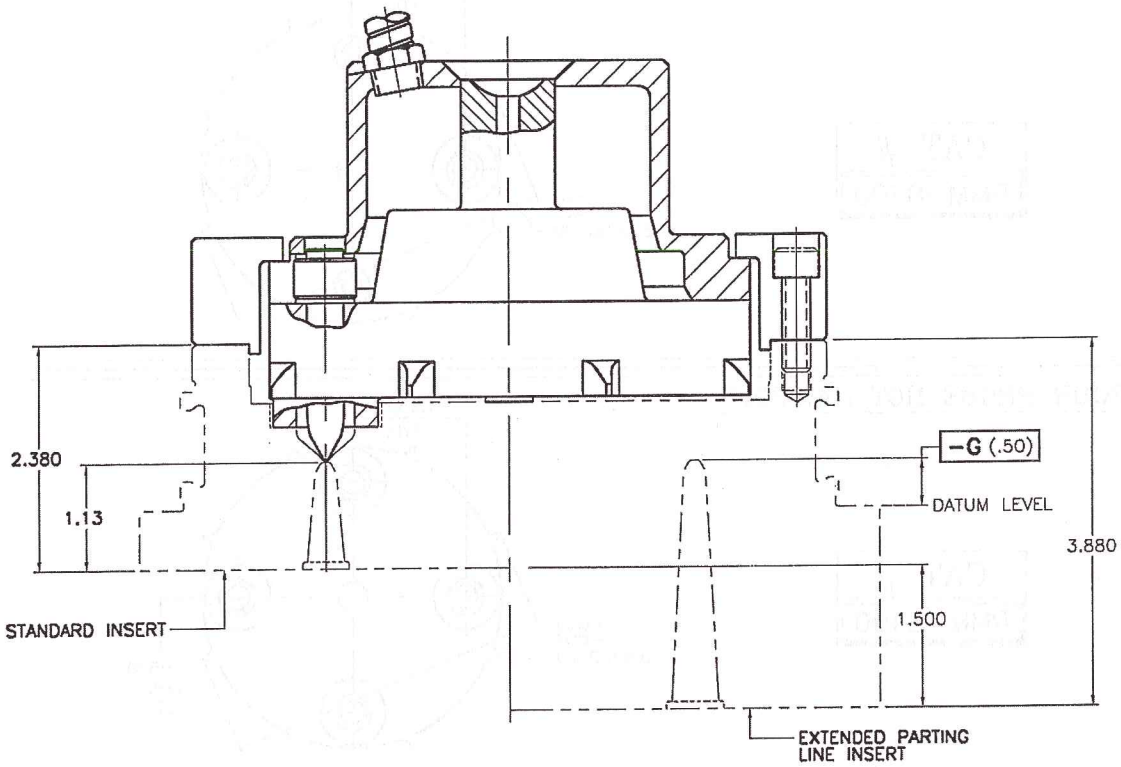

RECOMMENDED MAXIMUM GATE LEVEL

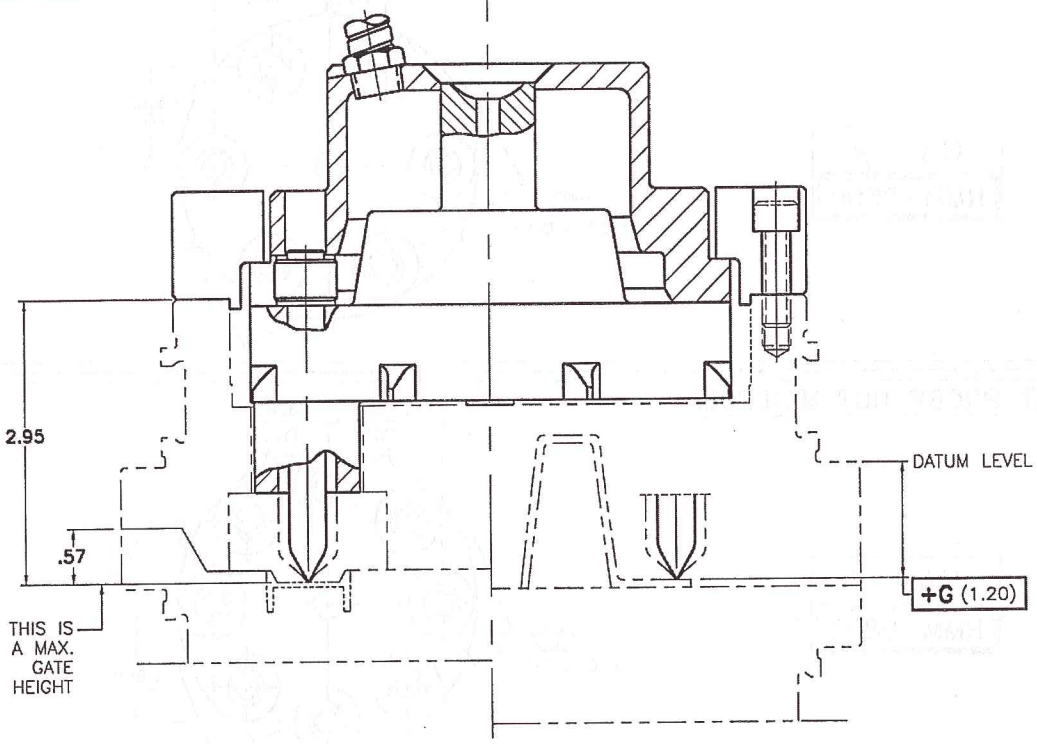

8" Hot Manifold Components

8" TWO PROBE HOT MANIFOLD

CAT #
RMM-8200

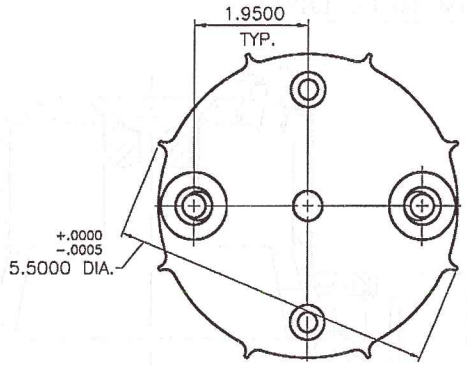

8" FOUR PROBE HOT MANIFOLD

CAT #
RMM-8400

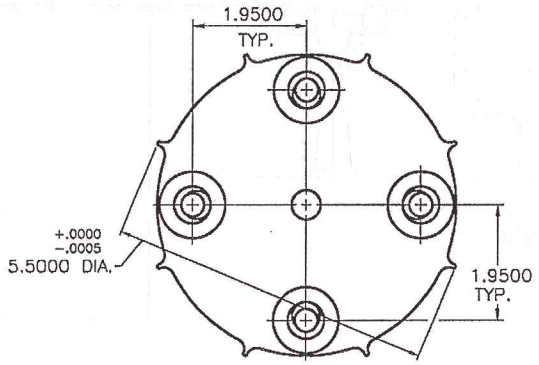

8" SIX PROBE HOT MANIFOLD

CAT #
RMM-8600

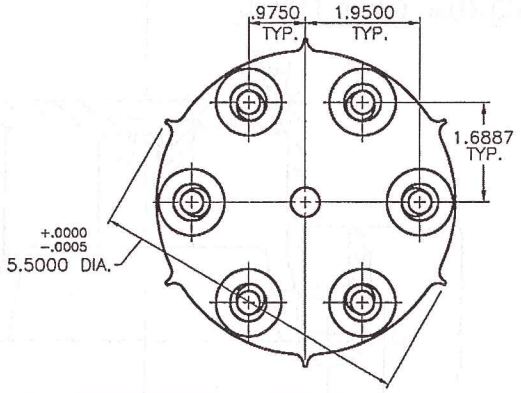

8" EIGHT PROBE HOT MANIFOLD

CAT #
RMM-8800

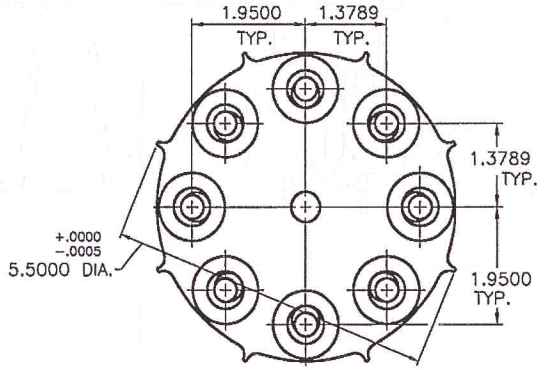

www.modularmoldsystems.com Phone: 800-860-3974 419-675-3334 Fax: 419-675-3283

8" Hot Manifold Components

CAVITY-READY SERIES

MODULAR MOLD SYSTEMS

8" HOT MANIFOLD PROBE

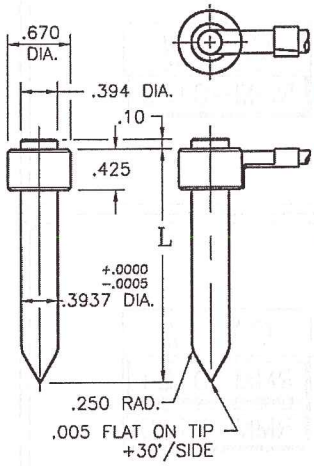

CAT #	L	VOLTS	WATTS	CAT #	L	VOLTS	WATTS
RMM-8020	2.150	240	160	RMM-8027	3.200	240	190
RMM-8021	2.300	240	160	RMM-8028	3.350	240	210
RMM-8022	2.450	240	160	RMM-8029	3.500	240	215
RMM-8023	2.600	240	160	RMM-8030	3.650	240	225
RMM-8024	2.750	240	165	RMM-8031	3.800	240	235
RMM-8025	2.900	240	170	RMM-8032	3.950	240	245
RMM-8026	3.050	240	180				

MAT'L D-2
HDN. Rc 44

ADJUSTMENT SHIM

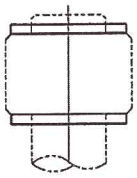

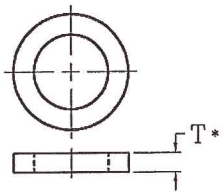

CAT #	T
RMM-0110	.06
RMM-0111	.11

SOLD IN PACKAGES OF 10

* OVERSIZE FOR ADJUSTMENT

PROBE THERMOCOUPLE

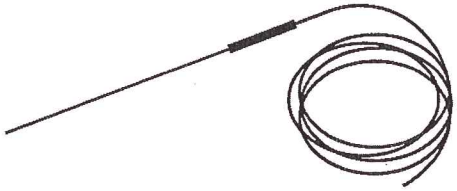

TYPE J

CAT #
RMM-0100

HOT MANIFOLD BODY THERMOCOUPLE

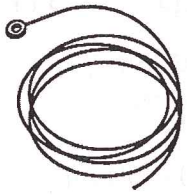

TYPE J

CAT #
RMM-0101

HOT MANIFOLD BODY HEATER

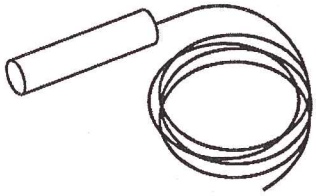

RAMA 3B2A/PCF36
3/8 DIA. x 2"
240 VOLT
200 WATT

CAT #
RMM-8010

8" Hot Manifold Components

REGISTER RING

OPTIONAL

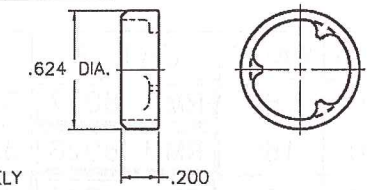

CAT #
RMM-0130

* MUST BE ORDERED SEPARATELY

CONDUIT

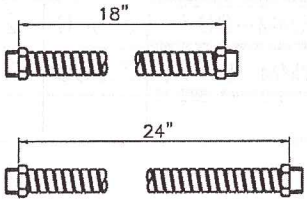

LENGTH	CAT #
18"	RMM-0124
24"	RMM-0120

HOT MANIFOLD SYSTEM

For Engineering
Assistance
Call
1-800-860-3974
1-419-675-3334

www.modularmoldsystems.com Phone: 800-860-3974 419-675-3334 Fax: 419-675-3283

Hot Manifold Electrical Connections

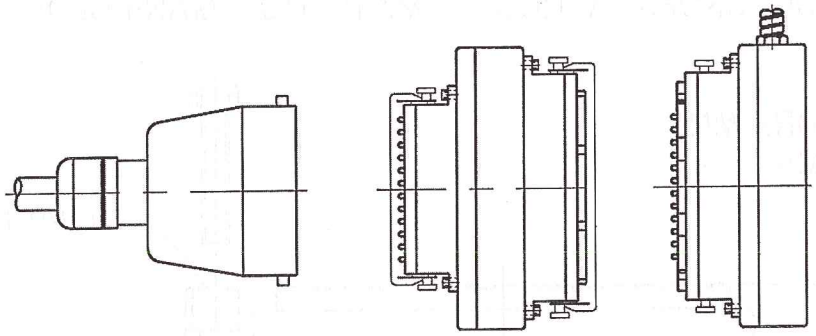

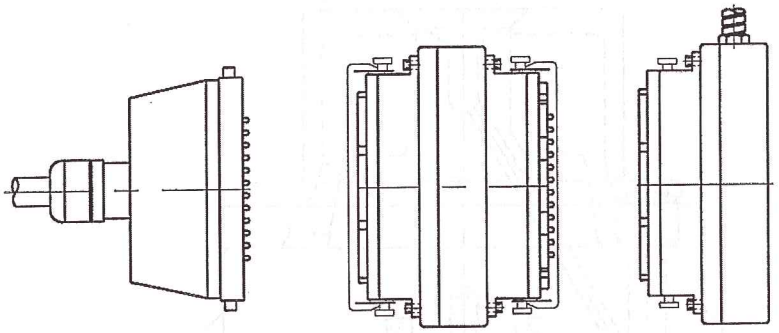

ADAPTER PLUG

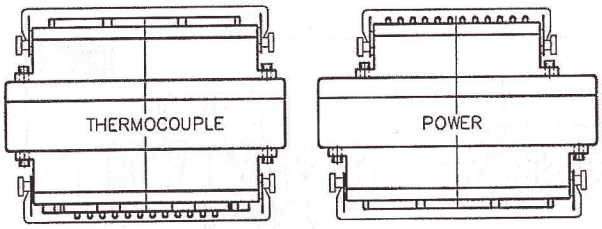

THERMOCOUPLE	POWER
RMM-0150	RMM-0151

DIRECT CONNECTION

CONTROLLER CABLES CAN BE REWIRED TO PLUG DIRECTLY INTO THE ROUND MATE MANIFOLD WITHOUT THE NEED OF AN ADAPTER.

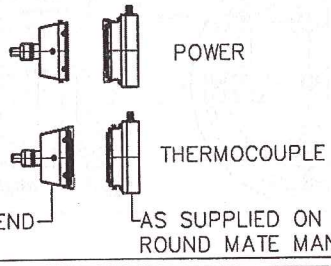

THERMOCOUPLE PLUG END	POWER PLUG END
RMM-0160	RMM-0161

Hot Manifold Technical Guide

INCLUDED WHEN YOU ORDER A ROUND MATE HOT MANIFOLD:

- CLAMP RING
- CONNECTORS
- ENGINEERING DRAWING
- PROBE & SHIMS

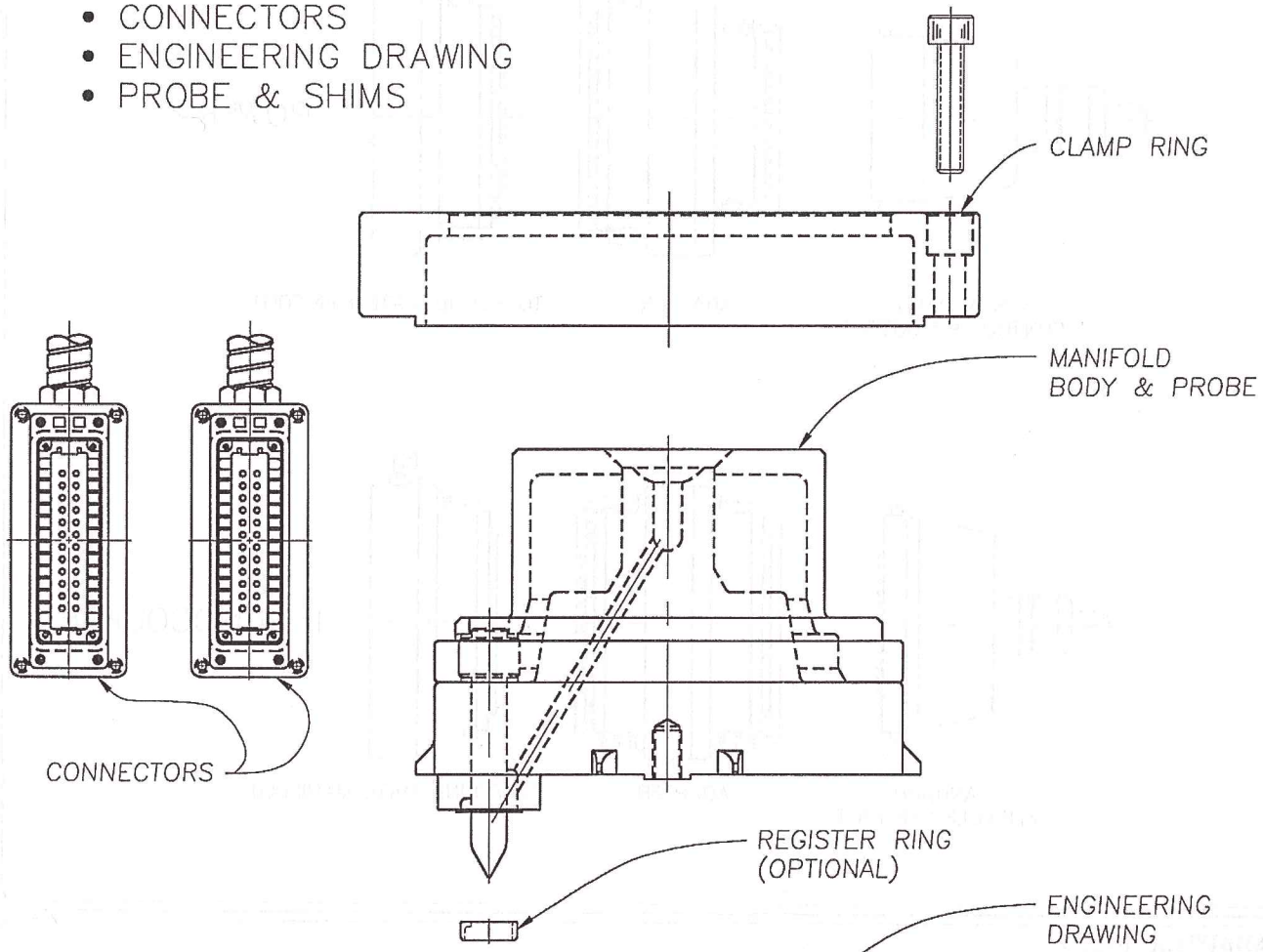

ENGINEERING DRAWING

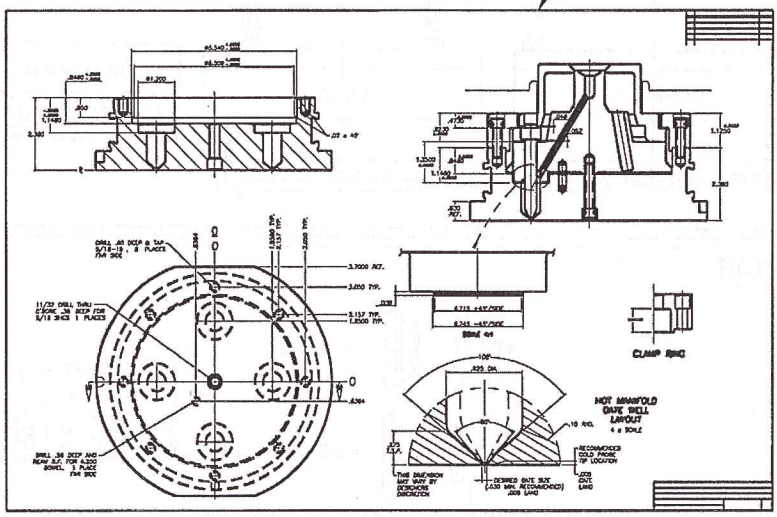

Section Six

Mold Components & Supplies

Supplies

Machining Fixtures

6" INSERT MACHINING FIXTURE

HEAT-TREATABLE INSERTS WITH GRIND STOCK WILL NOT FIT INTO MACHINING FIXTURE.

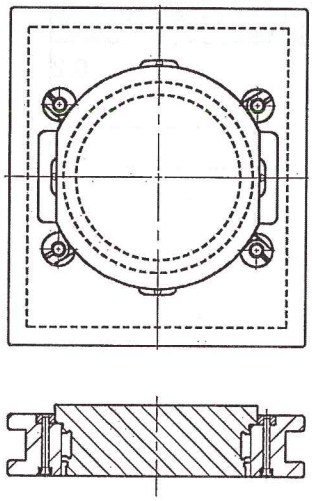

(SHOWN ASSEMBLED WITH INSERT)

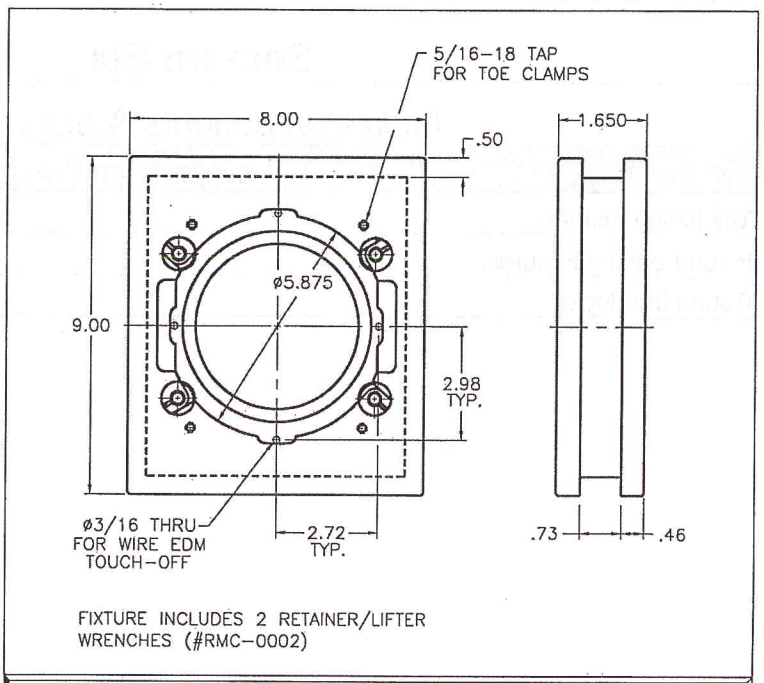

FIXTURE INCLUDES 2 RETAINER/LIFTER WRENCHES (#RMC-0002)

RMT-6100

8" INSERT MACHINING FIXTURE

HEAT-TREATABLE INSERTS WITH GRIND STOCK WILL NOT FIT INTO MACHINING FIXTURE.

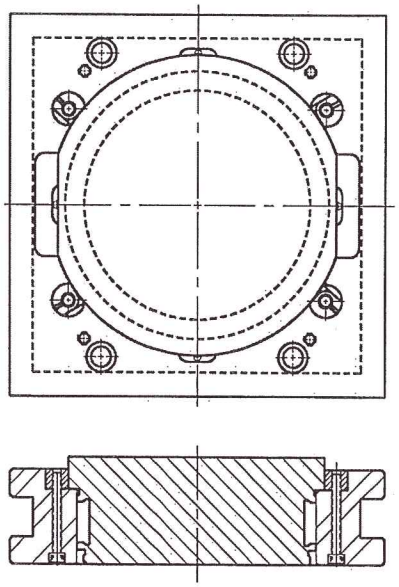

(SHOWN ASSEMBLED WITH INSERT)

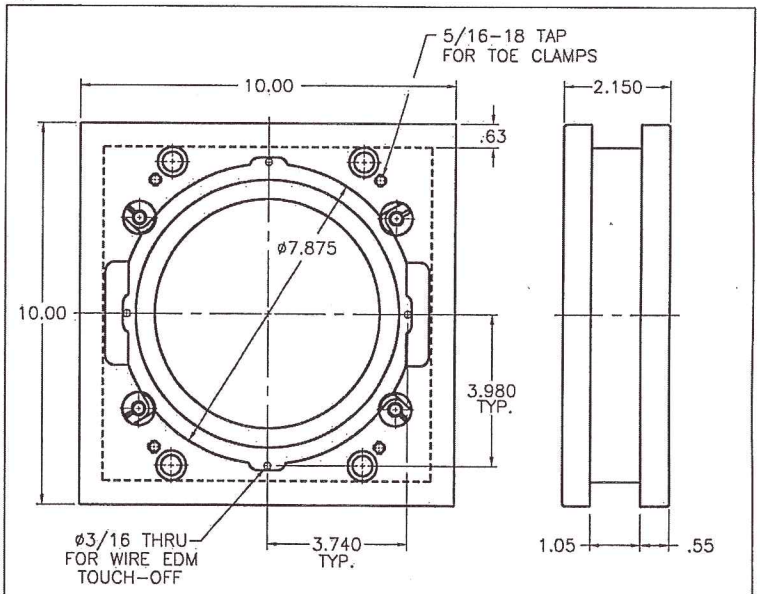

FIXTURE INCLUDES 2 RETAINER/LIFTER WRENCHES (#RMC-0002)

RMT-8100

Loading Fixtures

6" INSERT LOADING FIXTURE

ALLOWS FOR EASY PLACEMENT AND REMOVAL OF COVER AND EJECTOR SIDE 6" ROUND MATE STANDARD INSERTS. COMPLETE SET INCLUDES STANDARD RING, LIFTING ARM AND SCREW FASTENERS.

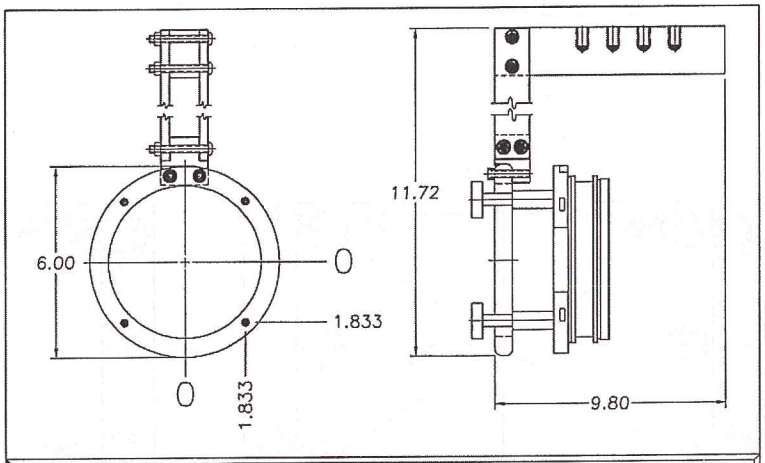

RMT-6200

NOTE:
1/4-20 TAPPED HOLES MUST BE PLACED IN FACE OF INSERT AT GIVEN LOCATIONS.

OPTIONAL 6" BLANK DISC

ALLOWS FOR EASY PLACEMENT AND REMOVAL OF COVER AND EJECTOR SIDE 6" ROUND MATE CUSTOM INSERTS.

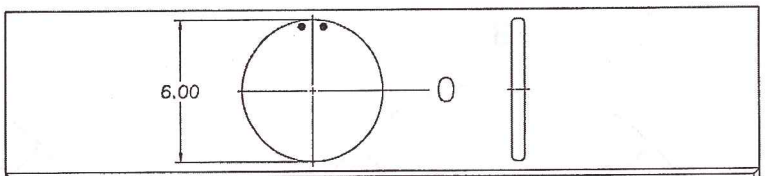

RMT-6202

NOTE:
TAPPED HOLES MAY BE PLACED ANYWHERE TO MATCH FACE OF CUSTOM INSERT.

8" INSERT LOADING FIXTURE

ALLOWS FOR EASY PLACEMENT AND REMOVAL OF COVER AND EJECTOR SIDE 8" ROUND MATE STANDARD INSERTS. COMPLETE SET INCLUDES STANDARD RING, LIFTING ARM AND SCREW FASTENERS.

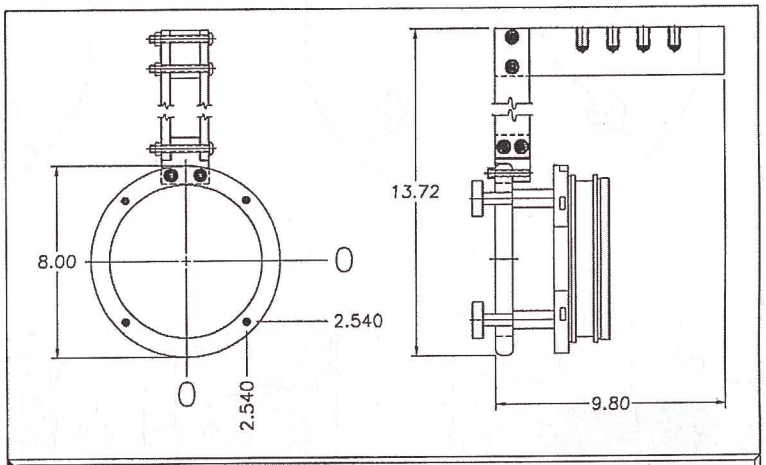

RMT-8200

NOTE:
1/4-20 TAPPED HOLES MUST BE PLACED IN FACE OF INSERT AT GIVEN LOCATIONS.

OPTIONAL 8" BLANK DISC

ALLOWS FOR EASY PLACEMENT AND REMOVAL OF COVER AND EJECTOR SIDE 8" ROUND MATE CUSTOM INSERTS.

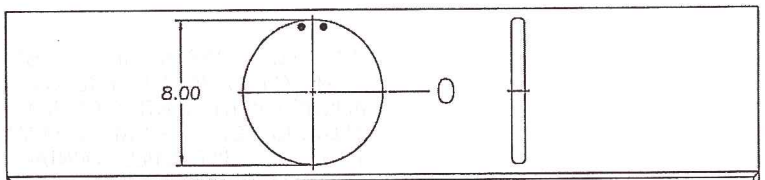

RMT-8202

NOTE:
TAPPED HOLES MAY BE PLACED ANYWHERE TO MATCH FACE OF CUSTOM INSERT.

Round Interlocks

ROUND INTERLOCKS

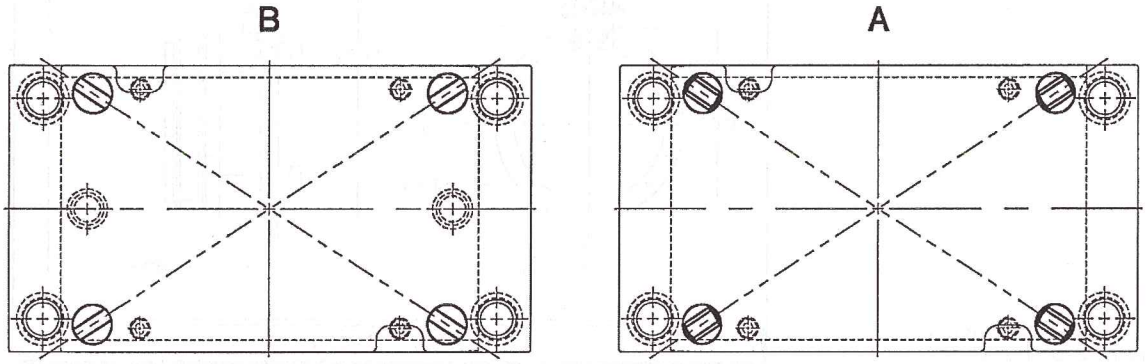

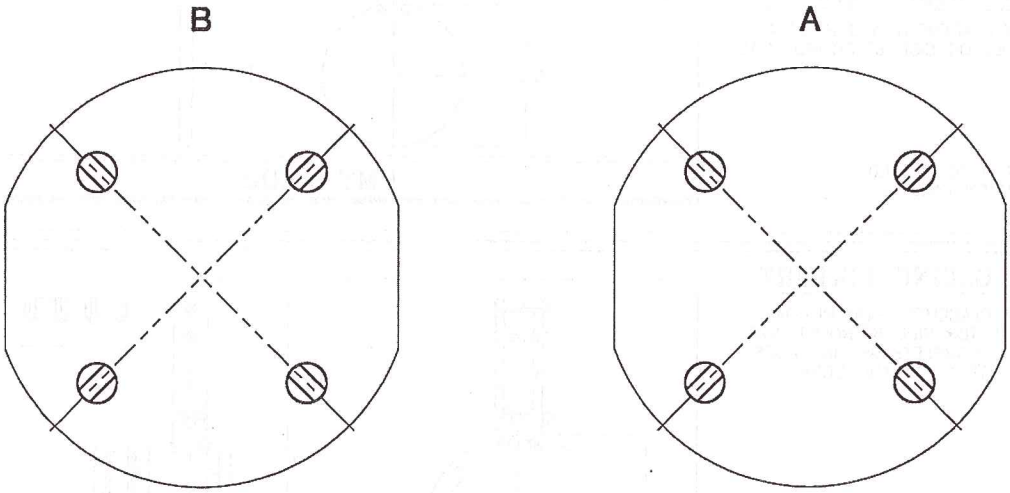

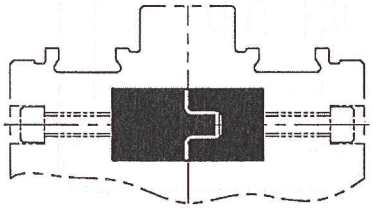

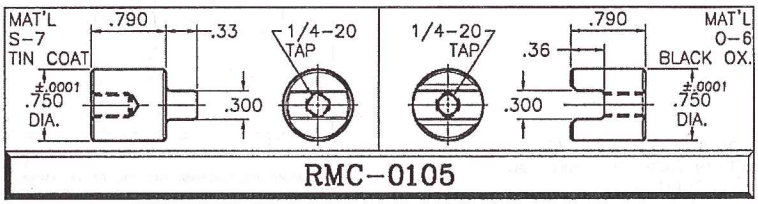

INTERLOCK ASSEMBLIES TO BE INSTALLED WITH INTERLOCK ALIGNED WITH CENTER OF MOLD ALLOWING FOR UNIFORM THERMAL EXPANSION WHILE STILL MAINTAINING DYNAMIC CAVITY INTERLOCKING

MODULAR MOLD SYSTEMS

Section Seven

Catalog Pricing Pages

Special Notes:

All prices in price list are subject to change at any time.

Please note that not all catalog items are available in stock.

Modular Mold Price List

Section Two

Round Mate Interchangeable Systems

		Round Mate Micro Series	
Page 2.4	RMF0311	3" Single Position Micro Master Frame	**$4,500.00**
Page 2.5	RMC3020	Locating Ring 2.240 Dia. - 3" Master Frame	**$195.00**
	RMC3021	Locating Ring 1.175 Dia. - 3" Master Frame	**$195.00**
	RMC3030	Platen Locating Ring Insert 2.250 Dia.	**$65.00**
	RMC3031	Platen Locating Ring Insert 1.181 Dia.	**$65.00**
	RMC3160	Mold Clamp	**$100.00**
	RMC3170	Knockout Bolt (Pack of 5)	**$26.00**
Page 2.6	RMC0002	Retainer/Lifter Wrench (Std.)	**$42.00**
	RMC0004	T Handle 1/4"	**$16.00**
Page 2.8	MSF0413	4" Single Position Micro Master Frame	**$6,200.00**
Page 2.9	RMC0002	Retainer/Lifter Wrench (Std.)	**$42.00**
	RMC0006	T Handle 6mm	**$18.00**
	MSC4020	Locating Ring 3.990 Dia.	**$235.00**
		4" Round Mate EX Series	
Page 2.12	RMF0413	4" Single Position Master Frame (6 x 8)	**$6,200.00**
Page 2.13	RMC0002	Retainer/Lifter Wrench (Std.)	**$42.00**
	RMC0004	T Handle 1/4"	**$16.00**
	RMC4021	Locating Ring 4.331 Dia.	**$325.00**
	RMC4020	Locating Ring 3.990 Dia.	**$235.00**
Page 2.14	RMF0423	4" EX2 Master Frame 3" C	**$15,000.00**
	RMF0424	4" EX2 Master Frame 4" C	**$15,200.00**
	RMF0425	4" EX2 Master Frame 5" C	**$15,400.00**
Page 2.15	RMC0002	Retainer/Lifter Wrench (Std.)	**$42.00**
	RMC0006	T Handle 6mm	**$18.00**
	RMC0007	Long T Handle 6mm	**$24.00**
	RMC0070	Locating Ring 3.990 Dia.	**Call**
	RMC0071	Locating Ring Tall 3.990 Dia.	**Call**
	RMC0072	Locating Ring 4.331 Dia.	**Call**
	RMC0073	Locating Ring Tall 3.990 Dia.	**Call**
	RMC4052	"A" Plate Insulator Board 4.00 Diameter	**Call**
	RMC4053	"B" Plate Insulator Board	**Call**

Modular Mold Price List

Section Two

Round Mate Interchangeable Systems

		6" Round Mate	
Page 2.18	RMF0613	6" Single Position Master Frame 3" C	**$6,500.00**
	RMF0614	6" Single Position Master Frame 4" C	**$6,600.00**
Page 2.19	RMC6022	Locating Ring Tall 3.990 Dia.	**$278.00**
	RMC6020	Locating Ring 3.990 Dia.	**$227.00**
	RMC6021	Locating Ring 4.331 Dia.	**$335.00**
	RMC6023	Locating Ring Tall 4.331 Dia.	**$327.00**
	RMC6038	Extended Nozzle Disc	**$230.00**
	RMC6050	"A" Insulator Plate	**$91.00**
	RMC6051	"B" Insulator Plate	**$91.00**
	RMC60511	"B" Insulator Plate	**Call**
	RMC60501	"A" Insulator Plate	**Call**
Page 2.20	RMC6030	Sprue Bushing 1/2" R 5/32" O	**$304.00**
	RMC6031	Sprue Bushing 1/2" R 7/32" O	**$400.00**
	RMC6032	Sprue Bushing 1/2" R 9/32" O	**$400.00**
	RMC6035	Sprue Bushing 3/4" R 7/32" O	**$400.00**
	RMC0001	Ejector K.O. Mounting Block (2 Pack)	**$95.00**
	RMC0002	Retainer/Lifter Wrench (Std.)	**$42.00**
	RMC0003	Retainer/Lifter Wrench (Long)	**$48.00**
	RMC0004	T Handle	**$16.00**
Page 2.22	RMF4613	6" Single Position 3-Plate 3" C	**$9,500.00**
	RMF4614	6" Single Position 3-Plate 4" C	**$9,600.00**
Page 2.23	RMC6020	Locating Ring 3.990 Dia.	**$227.00**
	RMC6021	Locating Ring 4.331 Dia.	**$335.00**
	RMC6022	Locating Ring Tall 3.990 Dia.	**$278.00**
	RMC6050	"A" Insulator Plate	**$91.00**
	RMC6051	"B" Insulator Plate	**$91.00**
	RMC60511	"B" Insulator Plate	**Call**
	RMC60501	"A" Insulator Plate	**Call**
Page 2.24	RMC0001	Ejector K.O. Mounting Block (2 Pack)	**$95.00**
	RMC0002	Retainer/Lifter Wrench (Std.)	**$42.00**
	RMC0003	Retainer/Lifter Wrench (Long)	**$48.00**
	RMC0004	T Handle	**$16.00**
	RMC61300	Extended Nozzle Cone for 3-Plate (.750 Dia)	**$490.00**
	RMC61301	Runner Stripper Disc for 3-Plate (.7700 Dia)	**$620.00**
	RMC61302	Extended Nozzle Cone for 3-Plate (1.600 Dia)	**$490.00**
	RMC61303	Runner Stripper Disc for 3-Plate (1.6200 Dia)	**$620.00**
Page 2.26	RMF0623	6" EX2 Master Frame 3" C	**$16,000.00**
	RMF0624	6" EX2 Master Frame 4" C	**$16,200.00**
	RMF0625	6" EX2 Master Frame 5" C	**$16,400.00**
Page 2.27	RMC0002	Retainer/Lifter Wrench (Std.)	**$42.00**
	RMC0004	T Handle	**$16.00**
	RMC0005	Long T Handle	**$22.00**
	RMC0070	Locating Ring 3.990 Dia.	**Call**
	RMC0071	Locating Ring Tall 3.990 Dia.	**Call**
	RMC0072	Locating Ring 4.331 Dia.	**Call**
	RMC0073	Locating Ring Tall 3.990 Dia.	**Call**
	RMC6052	"A" Insulator Plate	**Call**
	RMC6053	"B" Insulator Plate	**Call**

Modular Mold Price List

Section Two

Round Mate Interchangeable Systems

		8" Round Mate	
Page 2.30	RMF0813	8" Single Position Master Frame 3" C	**$8,800.00**
	RMF0814	8" Single Position Master Frame 4" C	**$8,900.00**
	RMF0815	8" Single Position Master Frame 5" C	**$9,000.00**
Page 2.31	RMC8020	Locating Ring 3.990 Dia.	**$294.00**
	RMC8021	Locating Ring 4.331 Dia.	**$375.00**
	RMC8022	Locating Ring Tall 3.990 Dia.	**$350.00**
	RMC8023	Tall Locating Ring 4.331 Dia.	**$390.00**
	RMC8038	Extended Nozzle Disc	**$292.00**
	RMC8050	"A" Insulator Plate	**$104.00**
	RMC8051	"B" Insulator Plate	**$104.00**
Page 2.32	RMC0001	Ejector K.O. Mounting Block (2 Pack)	**$95.00**
	RMC0002	Retainer/Lifter Wrench (Std.)	**$42.00**
	RMC0003	Retainer/Lifter Wrench (Long)	**$48.00**
	RMC0004	T Handle	**$16.00**
	RMC8030	Sprue Bushing 1/2" R 5/32" O	**$391.00**
	RMC8031	Sprue Bushing 1/2" R 7/32" O	**$437.00**
	RMC8032	Sprue Bushing 1/2" R 9/32" O	**$437.00**
	RMC00013	Ejector K.O. Mounting Block (2 Pack)	**$95.00**
Page 2.34	RMF4813	8" Single Position 3-Plate 3" C	**$12,800.00**
	RMF4814	8" Single Position 3-Plate 4" C	**$12,900.00**
	RMF4815	8" Single Position 3-Plate 5" C	**$13,000.00**
Page 2.35	RMC8020	Locating Ring 3.990 Dia.	**$294.00**
	RMC8021	Locating Ring 4.331 Dia.	**$375.00**
	RMC8022	Locating Ring Tall 3.990 Dia.	**$350.00**
	RMC8023	Locating Ring Tall 4.331 Dia.	**$390.00**
	RMC8050	"A" Insulator Plate	**$104.00**
	RMC8051	"B" Insulator Plate	**$104.00**
Page 2.36	RMC0002	Retainer/Lifter Wrench (Std.)	**$42.00**
	RMC0003	Retainer/Lifter Wrench (Long)	**$48.00**
	RMC0004	T Handle	**$16.00**
	RMC81300	Extended Nozzle Cone for 3-Plate (.750 Dia)	**$850.00**
	RMC81301	Runner Stripper Disc for 3-Plate (.7700 Dia)	**$810.00**
	RMC81302	Extended Nozzle Cone for 3-Plate (1.600 Dia)	**$850.00**
	RMC81303	Runner Stripper Disc for 3-Plate (1.6200 Dia)	**$810.00**
Page 2.38	RMF0823	8" EX2 Master Frame 3" C	**$19,000.00**
	RMF0824	8" EX2 Master Frame 4" C	**$19,200.00**
	RMF0825	8" EX2 Master Frame 5" C	**$19,400.00**
Page 2.39	RMC0002	Retainer/Lifter Wrench (Std.)	**$42.00**
	RMC0004	T Handle	**$16.00**
	RMC0005	Long T Handle	**$22.00**
	RMC0070	Locating Ring 3.990 Dia.	**Call**
	RMC0071	Locating Ring Tall 3.990 Dia.	**Call**
	RMC0072	Locating Ring 4.331 Dia.	**Call**
	RMC0073	Locating Ring Tall 3.990 Dia.	**Call**

Options for 6" and 8" Round Mate Master Frames			
Page 3.2	RMP0608	6" Single Position Clamp Plate Option	**Call**
	RMP0609	European Bottom Clamp Plate	**Call**
	RMP0808	8" Single Position Clamp Plate Option	**Call**
	RMP0809	European Bottom Clamp Plate	**Call**
Page 3.3	RMP0617	6" Single Position Water Manifold Option	**Call**
	RMP0817	8" Single Position Water Manifold Option	**Call**
Page 3.4	RMC6180	6" Single Position Hydraulic Unscrewing Option	**Call**
	RMC6190	6" Single Position Electric Unscrewing Option	**Call**
	RMC8180	8" Single Position Hydraulic Unscrewing Option	**Call**
	RMC8190	8" Single Position Electric Unscrewing Option	**Call**
Page 3.5	RMC6180	6" Single Position Hydraulic Unscrewing Option	**Call**
	RMC6190	6" Single Position Electric Unscrewing Option	**Call**
	RMC8180	8" Single Position Hydraulic Unscrewing Option	**Call**
	RMC8190	8" Single Position Electric Unscrewing Option	**Call**

Modular Mold Price List

Section Four

Cavity Inserts & Components

		Round Mate Micro Inserts and Components	
Page 4.4	RMI3315	3" Standard Height Insert P-20 Micro Series	$170.00
	RMI3316	3" .100 Stand Up Insert P-20 Micro Series	$185.00
	RMI3320	3" .500 Stand Up Insert P-20 Micro Series	$210.00
	RMI3415	3" Standard Height Insert S-7 Micro Series	$200.00
	RMI3416	3" .100 Stand Up Insert S-7 Micro Series	$220.00
	RMI3420	3" .500 Stand Up Insert S-7 Micro Series	$250.00
	RMI3515	3" Standard Height Insert H-13 Micro Series	$235.00
	RMI3516	3" .100 Stand Up Insert H-13 Micro Series	$255.00
	RMI3520	3" .500 Stand Up Insert H-13 Micro Series	$285.00
	RMI3615	3" Standard Height Insert 420SS Micro Series	$225.00
	RMI3616	3" .100 Stand Up Insert 420SS Micro Series	$245.00
	RMI3620	3" .500 Stand Up Insert 420SS Micro Series	$275.00
	RMI3815	3" Standard Height Insert 420PH Micro Series	$275.00
	RMI3816	3" .100 Stand Up Insert 420PH Micro Series	$295.00
	RMI3820	3" .500 Stand Up Insert 420PH Micro Series	$325.00
Page 4.5	RMC0010	Water Dam (Pack of 2)	$18.00
	RMC3001	Core Retainer Plate	$35.00
	RMC3002	Ejector Retainer Plate	$30.00
	RMC3003	Bottom Ejector Plate	$35.00
	RMC3015	Buna-N O-Ring Set	$3.00
	RMC3016	Buna-N O-Ring Set (10 Sets)	$21.00
	RMC3017	Viton O-Ring Set	$8.00
	RMC3018	Viton O-Ring Set (4 Pack)	$26.00
Page 4.6	RMC0017	Insert Safety Strap (10 Pack)	$7.50
	RMC0080	Water Baffle 5/16 Dia. (10 Pack)	$13.50
	RMC0081	Water Baffle 1/2 Dia. (10 Pack)	$13.50
Page 4.8	MSI4315	4" Standard Height Insert P-20	$185.00
	MSI4316	4" .100 Stand Up Insert P-20 Micro Series	Call
	MSI4320	4" .500 Stand Up Insert P-20 Micro Series	Call
	MSI4325	4" 1.000 Stand Up Insert P-20 Micro Series	Call
	MSI4415	4" Standard Height Insert S-7 Micro Series	$200.00
	MSI4416	4" .100 Stand Up Insert S-7 Micro Series	Call
	MSI4420	4" .500 Stand Up Insert S-7 Micro Series	Call
	MSI4425	4" 1.000 Stand Up Insert S-7 Micro Series	Call
	MSI4515	4" Standard Height Insert H-13 Micro Series	$280.00
	MSI4516	4" .100 Stand Up Insert H-13 Micro Series	$280.00
	MSI4520	4" .500 Stand Up Insert H-13 Micro Series	$290.00
	MSI4525	4" 1.000 Stand Up Insert H-13 Micro Series	Call
	MSI4615	4" Standard Height Insert 420SS Micro Series	$265.00
	MSI4616	4" .100 Stand Up Insert 420SS Micro Series	$285.00
	MSI4620	4" .500 Stand Up Insert 420SS Micro Series	Call
	MSI4625	4" 1.000 Stand Up Insert 420SS Micro Series	Call
	MSI4815	4" Standard Height Insert 420PH Micro Series	$295.00
	MSI4816	4" .100 Stand Up Insert 420PH Micro Series	$315.00
	MSI4820	4" .500 Stand Up Insert 420PH Micro Series	Call
	MSI4825	4" 1.000 Stand Up Insert 420PH Micro Series	Call

Modular Mold Price List

Section Four

Cavity Inserts & Components

		Round Mate Micro Inserts and Components	
Page 4.9	RMC3018	Viton O-Ring Set (4 Sets)	**$26.00**
	MSC4001	Core Retainer Plate	**$38.00**
	RMC4002	Ejector Retainer Plate	**$40.00**
	RMC4003	Ejector Plate	**$40.00**
	MSC4004	Sleeve Ejection Core Retainer Plate	**$32.00**
	RMC4015	Buna-N O-Ring Set	**$3.00**
	RMC4016	Buna-N O-Ring Set (10 Sets)	**$21.00**
	RMC4017	Viton O-Ring Set	**$8.00**
	RMC4018	Viton O-Ring Set (4 Sets)	**$26.00**
Page 4.10	RMC0020	Support Pillar 1/2 Hex X 2.7520	**$25.00**
	RMC0021	Support Pillar 1/2 Hex X 3.752	**$25.00**
	RMC0080	Water Baffle 5/16 Dia. (10 Pack)	**$13.50**
	RMC0081	Water Baffle 1/2 Dia. (10 Pack)	**$13.50**
Page 4.11	RMC0017	Insert Safety Strap (10 Pack)	**$7.50**
	RMC6010	Fitted Storage Box	**$125.00**
		Round Mate Inserts and Components	
Page 4.12	RMI4319	4" Standard Height Insert P-20	**$185.00**
	RMI4320	4" .100 Stand Up Insert P-20	**$225.00**
	RMI4324	4" .500 Stand Up Insert P-20	**$235.00**
	RMI4329	4" 1.000 Stand Up Insert P-20	**$260.00**
	RMI4419	4" Standard Height Insert S-7	**$200.00**
	RMI4420	4" .100 Stand Up Insert S-7	**$280.00**
	RMI4424	4" .500 Stand Up Insert S-7	**$290.00**
	RMI4429	4" 1.000 Stand Up Insert S-7	**$320.00**
	RMI4519	4" Standard Height Insert H-13	**$275.00**
	RMI4520	4" .100 Stand Up Insert H-13	**$295.00**
	RMI4524	4" .500 Stand Up Insert H-13	**$335.00**
	RMI4529	4" 1.000 Stand Up Insert H-13	**$400.00**
	RMI4619	4" Standard Height Insert 420SS	**$265.00**
	RMI4620	4" .100 Stand Up Insert 420SS	**$285.00**
	RMI4624	4" .500 Stand Up Insert 420SS	**$300.00**
	RMI4629	4" 1.000 Stand Up Insert 420SS	**$315.00**
	RMI4819	4" Standard Height Insert 420SS Prehard	**$295.00**
	RMI4820	4" .100 Stand Up Insert 420SS Prehard	**$315.00**
	RMI4824	4" .500 Stand Up Insert 420SS Prehard	**$330.00**
	RMI4829	4" 1.000 Stand Up Insert 420SS Prehard	**$345.00**
Page 4.13	RMC0015	Quick Ejector Connector (Molder End)	**$45.00**
	RMC0016	Quick Ejector Connector (Insert End)	**$180.00**
	RMC4001	Core Retainer Plate	**$42.00**
	RMC4002	Ejector Retainer Plate	**$40.00**
	RMC4003	Ejector Plate	**$40.00**
	RMC4004	Sleeve Ejection Core Retainer Plate	**$38.00**
	RMC4006	Quick Connect Ejector Plate	**$70.00**

Modular Mold Price List

Section Four

Cavity Inserts & Components

		Round Mate Inserts and Components	
Page 4.14	RMC0020	Support Pillar 1/2 Hex X 2.7520	$25.00
	RMC0021	Support Pillar 1/2 Hex X 3.752	$25.00
	RMC0025	Support Pillar 5/8 Hex X 5.127	$28.00
	RMC0027	Support Pillar 5/8 Hex X 6.127	$30.00
	RMC0080	Water Baffle 5/16 Dia. (10 Pack)	$13.50
	RMC0081	Water Baffle 1/2 Dia. (10 Pack)	$13.50
	RMC4015	Buna-N O-Ring Set	$3.00
	RMC4016	Buna-N O-Ring Set (10 Sets)	$21.00
	RMC4017	Viton O-Ring Set	$8.00
	RMC4018	Viton O-Ring Set (4 Sets)	$26.00
Page 4.15	RMC0010	Water Dam (Pack of 2)	$18.00
	RMC0017	Insert Safety Strap (10 Pack)	$7.50
	RMC6010	Fitted Storage Box	$90.00
	RMC6040	Return Pin Extension (4 Pack) 1"	$82.00
	RMC6041	Return Pin Extension (4 Pack) 1.5"	$82.00
	RMC6042	Return Pin Extension (4 Pack) 2.5"	$82.00
Page 4.16	RMI6319	6" Standard Height Insert P-20	$220.00
	RMI6320	6" .100 Stand Up Insert P-20	$240.00
	RMI6324	6" .500 Stand Up Insert P-20	$250.00
	RMI6329	6" 1.000 Stand Up Insert P-20	$260.00
	RMI6334	6" 1.500 Stand Up Insert P-20	$325.00
	RMI6419	6" Standard Height Insert S-7	$210.00
	RMI6420	6" .100 Stand Up Insert S-7	$310.00
	RMI6424	6" .500 Stand Up Insert S-7	$320.00
	RMI6429	6" 1.000 Stand Up Insert S-7	$350.00
	RMI6434	6" 1.500 Stand Up Insert S-7	$400.00
	RMI6519	6" Standard Height Insert H-13	$285.00
	RMI6520	6" .100 Stand Up Insert H-13	$305.00
	RMI6524	6" .500 Stand Up Insert H-13	$345.00
	RMI6529	6" 1.000 Stand Up Insert H-13	$430.00
	RMI6534	6" 1.500 Stand Up Insert H-13	$475.00
	RMI6619	6" Standard Height Insert 420SS	$300.00
	RMI6620	6" .100 Stand Up Insert 420SS	$320.00
	RMI6624	6" .500 Stand Up Insert 420SS	$335.00
	RMI6629	6" 1.000 Stand Up Insert 420SS	$350.00
	RMI6634	6" 1.500 Stand Up Insert 420SS	$390.00
	RMI6819	6" Standard Height Insert 420PH	$330.00
	RMI6820	6" .100 Stand Up Insert 420PH	$340.00
	RMI6824	6" .500 Stand Up Insert 420PH	$350.00
	RMI6829	6" 1.000 Stand Up Insert 420PH	$375.00
	RMI6834	6" 1.500 Stand Up Insert 420PH	$410.00
Page 4.17	RMC6001	Core Retainer Plate	$65.00
	RMC6002	Ejector Retainer Plate	$42.00
	RMC6003	Ejector Plate	$42.00
	RMC6005	Core Retainer Plate	$40.00
	RMC6006	Quick Connect Ejector Plate	$72.00
	RMC6007	Top Clamp Plate	$86.00
	RMC6008	Top Core Retainer Plate	$120.00
	RMC60061	Quick Connect Ejector Plate	Call

Modular Mold Price List

Section Four

Cavity Inserts & Components

		Round Mate Inserts and Components	
Page 4.18	RMC6004	Sleeve Ejection Core Retainer Plate	**$40.00**
	RMC6015	Buna-N O-Ring Set	**$6.00**
	RMC6016	Buna-N O-Ring Set (10 Sets)	**$47.00**
	RMC6017	Viton O-Ring Set	**$17.00**
	RMC6018	Viton O-Ring Set (4 Sets)	**$58.00**
Page 4.19	RMC0010	Water Dam (Pack of 2)	**$18.00**
	RMC0017	Insert Safety Strap (10 Pack)	**$7.50**
	RMC0022	Support Pillar 5/8 Hex X 3.127	**$25.00**
	RMC0023	Support Pillar 5/8 Hex X 3.627	**$25.00**
	RMC0024	Support Pillar 5/8 Hex X 4.627	**$26.00**
	RMC0025	Support Pillar 5/8 Hex X 5.127	**$28.00**
	RMC0026	Support Pillar 5/8 Hex X 5.627	**$28.00**
	RMC0080	Water Baffle 5/16 Dia. (10 Pack)	**$13.50**
	RMC0081	Water Baffle 1/2 Dia. (10 Pack)	**$13.50**
Page 4.20	RMC6010	Fitted Storage Box	**$125.00**
	RMC6011	Fitted Storage Box (Tall Insert)	**Call**
	RMC6040	Return Pin Extension (4 Pack) 1"	**$82.00**
	RMC6041	Return Pin Extension (4 Pack) 1.5"	**$82.00**
	RMC6042	Return Pin Extension (4 Pack) 2.5"	**$82.00**
	RMC8060	Support Pillar 4.377	**$40.00**
	RMC8061	Support Pillar 5.877	**$42.00**
	RMC8062	Support Pillar 6.377	**$42.00**
Page 4.22	RMI8324	8" Standard Height Insert P-20	**$335.00**
	RMI8325	8" .100 Stand Up Insert P-20	**$341.00**
	RMI8329	8" .500 Stand Up Insert P-20	**$360.00**
	RMI8334	8" 1.000 Stand Up Insert P-20	**$395.00**
	RMI8339	8" 1.500 Stand Up Insert P-20	**$410.00**
	RMI8424	8" Standard Height Insert S-7	**$360.00**
	RMI8425	8" .100 Stand Up Insert S-7	**$380.00**
	RMI8429	8" .500 Stand Up Insert S-7	**$400.00**
	RMI8434	8" 1.000 Stand Up Insert S-7	**$450.00**
	RMI8439	8" 1.500 Stand Up Insert S-7	**$475.00**
	RMI8524	8" Standard Height Insert H-13	**$400.00**
	RMI8525	8" .100 Stand Up Insert H-13	**$420.00**
	RMI8529	8" .500 Stand Up Insert H-13	**$450.00**
	RMI8534	8" 1.000 Stand Up Insert H-13	**$475.00**
	RMI8539	8" 1.500 Stand Up Insert H-13	**$525.00**
	RMI8624	8" Standard Height Insert 420SS	**$350.00**
	RMI8625	8" .100 Stand Up Insert 420SS	**$375.00**
	RMI8629	8" .500 Stand Up Insert 420SS	**$405.00**
	RMI8634	8" 1.000 Stand Up Insert 420SS	**$465.00**
	RMI8639	8" 1.500 Stand Up Insert 420SS	**$500.00**
	RMI8824	8" Standard Height Insert 420PH	**$450.00**
	RMI8825	8" .100 Stand Up Insert 420PH	**$500.00**
	RMI8829	8" .500 Stand Up Insert 420PH	**$525.00**
	RMI8834	8" 1.000 Stand Up Insert 420PH	**$575.00**
	RMI8839	8" 1.500 Stand Up Insert 420PH	**$640.00**

Modular Mold Price List

Section Four

Cavity Inserts & Components

		Round Mate Inserts and Components	
Page 4.23	RMC0015	Quick Ejector Connector (Molder End)	$45.00
	RMC0016	Quick Ejector Connector (Insert End)	$180.00
	RMC8001	Core Retainer Plate	$90.00
	RMC8002	Ejector Retainer Plate	$65.00
	RMC8003	Ejector Plate	$65.00
	RMC8005	Core Retainer Plate	$50.00
	RMC8006	Quick Connect Ejector Plate	$89.00
Page 4.24	RMC8004	Sleeve Ejection Core Retainer Plate	$60.00
	RMC8007	Top Clamp Plate	$100.00
	RMC8008	Top Core Retainer Plate	$169.00
	RMC8015	Buna-N O-Ring Set	$8.00
	RMC8016	Buna-N O-Ring Set (10 Sets)	$69.00
	RMC8017	Viton O-Ring Set	$25.00
	RMC8018	Viton O-Ring Set (4 Sets)	$81.00
	RMC8080	H20 Core Retainer Plate	Call
	RMC8081	H20 Manifold Plate	Call
Page 4.25	RMC0011	Water Dam (Pack of 2)	$18.00
	RMC0017	Insert Safety Strap (10 Pack)	$7.50
	RMC0023	Support Pillar 5/8 Hex X 3.627	$25.00
	RMC0024	Support Pillar 5/8 Hex X 4.627	$26.00
	RMC0025	Support Pillar 5/8 Hex X 5.127	$28.00
	RMC0026	Support Pillar 5/8 Hex X 5.627	$28.00
	RMC0027	Support Pillar 5/8 Hex X 6.127	$30.00
	RMC0028	Support Pillar 5/8 Hex X 6.627	$30.00
	RMC0085	Water Baffle 5/16 Dia. (10 Pack) 8" RM	$13.50
	RMC0086	Water Baffle 1/2 Dia. (10 Pack) 8" RM	$13.50
Page 4.26	RMC8010	Fitted Storage Box	$195.00
	RMC8040	Return Pin Extension 1.00" (Set of 4)	$82.00
	RMC8041	Return Pin Extension 1.50" (Set of 4)	$82.00
	RMC8042	Return Pin Extension 2.50" (Set of 4)	$82.00
	RMC8061	Support Pillar 5.8770	$42.00
	RMC8062	Support Pillar 6.3770	$42.00
	RMC8063	Support Pillar 6.8770	$43.00
	RMC8064	Support Pillar 7.3770	Call

Modular Mold Price List

Section Five

Round Mate Cavity Ready

		Round Mate Cavity Ready Slide Assemblies	
Page 5.4	MCR-6100	6" Cavity Ready Single Slide Assembly	**Call**
Page 5.5	BCR-3610	Slide 3.6 X 1.6000	**Call**
	BCR-3620	Slide Gib	**Call**
	BCR-3630	End Wedge	**Call**
	CCR-0101	Cavity Ready Push Pin (1.050 LONG)	**Call**
	M05M20	Spring 1/2 OD X 9/32 ID X 2" Long	**Call**
Page 5.6	MCR-8100	8" Cavity Ready Single Slide Assembly	**Call**
Page 5.7	BCR-5110	Cavity Ready Slide	**Call**
	BCR-5120	Slide Gib	**Call**
	BCR-5130	End Wedge	**Call**
	CCR-0101	Cavity Ready Push Pin (1.050 LONG)	**Call**
	M05M20	Spring 1/2 OD X 9/32 ID X 2" Long	**Call**
		Round Mate Hot Manifold	
Page 5.12	RMM6200	6" 2 Drop Manifold Assembly	**Call**
	RMM6400	6" 4 Drop Manifold Assembly	**Call**
	RMM6600	6" 6 Drop Manifold Assembly	**Call**
	RMM6000	Nozzle Bushing	**Call**
Page 5.13	RMM8020	Probe L=2.150	**Call**
	RMM8021	Probe L=2.300	**Call**
	RMM8022	Probe L=2.450	**Call**
	RMM8023	Probe L=2.600	**Call**
	RMM8024	Probe L=2.750	**Call**
	RMM8025	Probe L=2.900	**Call**
	RMM8026	Probe L=3.050	**Call**
	RMM8027	Probe L=3.200	**Call**
	RMM8028	Probe L=3.350	**Call**
	RMM8029	Probe L=3.500	**Call**
	RMM8030	Probe L=3.650	**Call**
	RMM8031	Probe L=3.800	**Call**
	RMM8032	Probe L=3.950	**Call**
	RMM0110	Adjustment Shim .06 Thick (10 Pack)	**Call**
	RMM0111	Adjustment Shim .110 Thick (10 Pack)	**Call**
	RMM0100	Probe Thermocouple	**Call**
	RMM0130	Probe Registration Ring	**Call**
	RMM0124	18" Flex Conduit Assembly	**Call**
	RMM0120	24" Flex Conduit Assembly	**Call**
Page 5.16	RMM8200	8" 2 Drop Manifold Assembly	**Call**
	RMM8400	8" 4 Drop Manifold Assembly	**Call**
	RMM8600	8" 6 Drop Manifold Assembly	**Call**
	RMM8800	8" 8 Drop Manifold Assembly	**Call**

Modular Mold Price List

Section Five

Round Mate Cavity Ready

		Round Mate Hot Manifold	
Page 5.17	RMM8020	Probe L=2.150	Call
	RMM8021	Probe L=2.300	Call
	RMM8022	Probe L=2.450	Call
	RMM8023	Probe L=2.600	Call
	RMM8024	Probe L=2.750	Call
	RMM8025	Probe L=2.900	Call
	RMM8026	Probe L=3.050	Call
	RMM8027	Probe L=3.200	Call
	RMM8028	Probe L=3.350	Call
	RMM8029	Probe L=3.500	Call
	RMM8030	Probe L=3.650	Call
	RMM8031	Probe L=3.800	Call
	RMM8032	Probe L=3.950	Call
	RMM0110	Adjustment Shim .06 Thick (10 Pack)	Call
	RMM0111	Adjustment Shim .110 Thick (10 Pack)	Call
	RMM0100	Probe Thermocouple	Call
	RMM0101	Probe Thermocouple	Call
	RMM8010	8" Manifold Body Heater	Call
Page 5.18	RMM0130	Probe Registration Ring	Call
	RMM0124	18" Flex Conduit Assembly	Call
	RMM0120	24" Flex Conduit Assembly	Call
Page 5.19	RMM0150	Thermocouple Adapter Plug	Call
	RMM0151	Power Adapter Plug	Call
	RMM0160	Direct Connect Controller Thermocouple Plug	Call
	RMM0161	Direct Connect Controller Power Plug	Call

		Supplies	
Page 6.2	RMT6100	6" Insert Machining Fixture	**Call**
	RMT8100	8" Insert Machining Fixture	**Call**
Page 6.3	RMT6200	6" Insert Loading Fixture	**Call**
	RMT6202	6" Insert Loading Fixture Disc	**Call**
	RMT8200	8" Insert Loading Fixture	**Call**
	RMT8202	8" Insert Loading Fixture Disc	**Call**
Page 6.4	RMC0105	Round Interlocks	**Call**

MODULAR MOLD SYSTEMS

Section Eight

Design/Engineering Data

MODULAR
MOLD SYSTEMS

ROUND MATE®

Moldmakers Reference Guide

Round Mate Inserts
3" and 4" Micro Inserts, 4" Standard Inserts,
6" and 8" Inserts

Uncontrolled for Reference Only

Revision 05

MODULAR MOLD SYSTEMS

Important Note:

The data contained in this mold makers guide has been compiled and developed form many sources. This guide is often updated with new product specifications and technical information. Although every effort has been made to cross-check and verify this information, Modular Mold Systems, is not responsible for its accuracy. This guide is to be used as a reference while designing your mold in a Patented Round Mate System. Before using this data for design or specification purposes please check with Modular Mold Systems to ensure you have the latest version of this Round Mate Mold Makers Guide or to receive official drawing specifications in a file format.

3" ROUND MATE® MICRO SERIES

INSERT DIMENSIONS

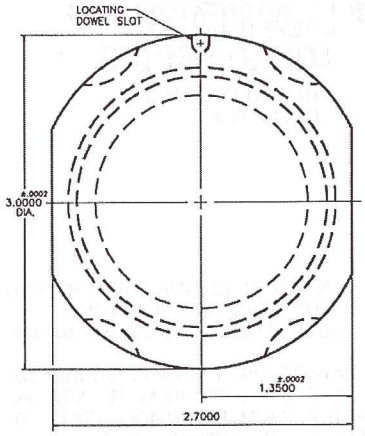

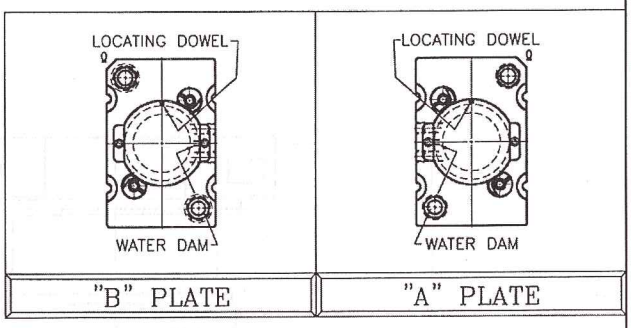

THE "A" INSERT IS THE SAME AS THE "B" INSERTS EXCEPT FOR THE WATER DAM LOCATION

TOOLMAKER IS TO INSTALL THE WATER DAM

WATER DAM IS TO LINE UP WITH WATER INLET/ OUTLET IN THE MASTER FRAME

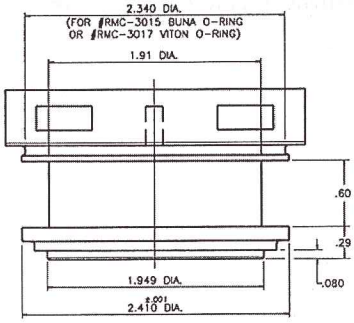

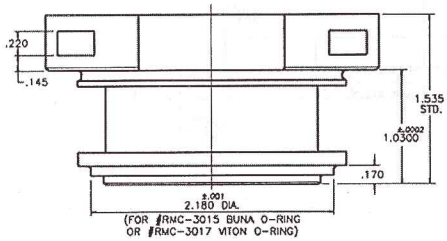

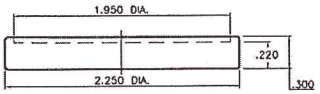

3" ROUND MATE® MICRO SERIES

GRINDING PROCEDURES

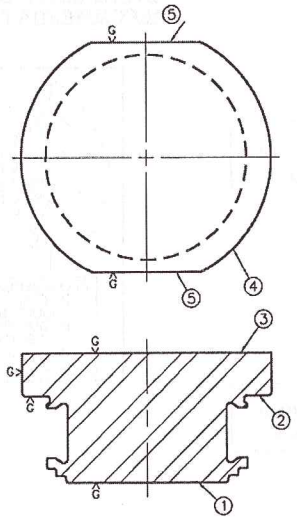

GRINDING PROCEDURES
3" ROUND MATE ®INSERT

THIS DRAWING IS SUPPLIED TO AID IN GRINDING "HEAT TREATABLE" INSERTS <u>AFTER</u> "HEAT TREAT"

When you receive the "Round Mate"® insert, in any heat treatable steel, it is machined to .005 /.010 oversize, per side, on all critical dimensions. Following the heat treating process, this additional stock must be removed in the following sequence:

(SEE ILLUSTRATION)

(1) Grind .004 extra stock from the bottom, or small diameter end, of the insert.

(2) Grind step, to the underside of the 3.000 diameter, to a measurement of 1.0300 (+/- .0002) Approximately the same .004 will be removed.

(3) Grind the face, or parting line, of the insert to achieve an over-all thickness of 1.535 (+.005/-.004) Grinding within these tolerances places the O-rings in ideal position for a perfect seal.

(4) Grind the outside diameter of the insert head to 3.0000 (+/-.0002)

(5) The final step is grinding the flats. It is extremely important that the flats be ground in relationship to the center of the insert diameter to assure registration and the absence of a parting line mismatch on the molded part. The dimension is 2.7000 (+/-.0002) between the flats (the 2.7000 must be centered on the 3.000 diameter +/-.0002 TIR).

Note: The other outside surfaces on the insert are <u>NOT</u> shipped oversized, therefore , grinding will probably be unnecessary. However, we suggest you check these O.D.'s for accuracy after heat treat.

3" ROUND MATE® MICRO SERIES

PIN AND PARTING LINE SETUP

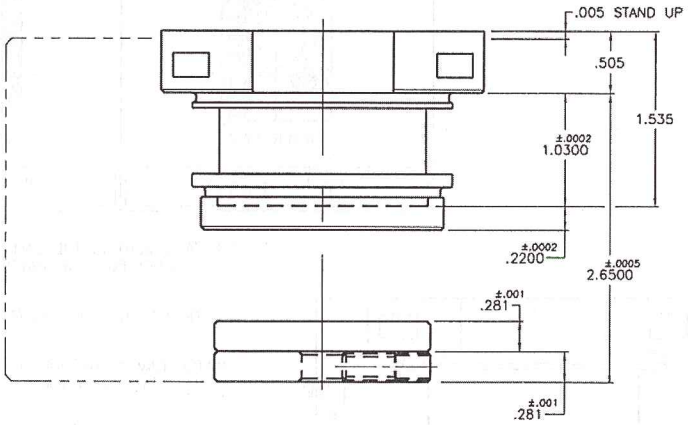

THIS DRAWING IS SUPPLIED TO AID WITH EJECTOR PIN AND PARTING LINE SET UP WHEN DESIGNING A ROUND MATE® MOLD.

THE 2.6500 DIMENSION IS SHOWN TO LOCATE THE EJECTOR PLATES, AND IN CONJUNCTION WITH DIMENSION: .281, TO DETERMINE EJECTOR PIN LENGTHS.

3" ROUND MATE® MICRO SERIES

REQUIREMENTS AND RECOMMENDATIONS

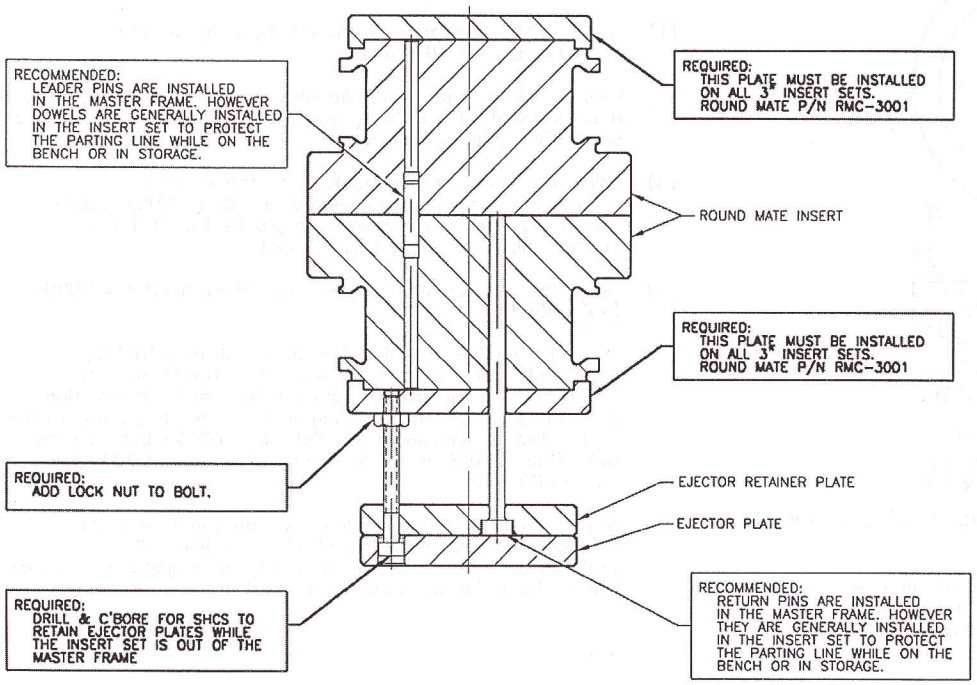

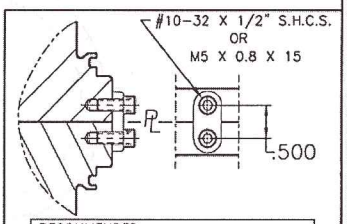

RECOMMENDED:
PARTING LINE SAFETY STRAPS SHOULD BE USED WHEN THE MOLD IS OUT OF THE MASTER FRAME TO PROTECT THE PARTING LINE. ONE INCLUDED WITH EACH INSERT ROUND MATE P/N RMC-0017

NOTES

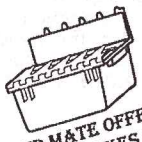

ROUND MATE OFFERS
STORAGE BOXES FOR
ALL SIZES OF INSERT SETS.
REFERENCE CATALOG PAGE #6.02

4" ROUND MATE® MICRO SERIES

INSERT DIMENSIONS

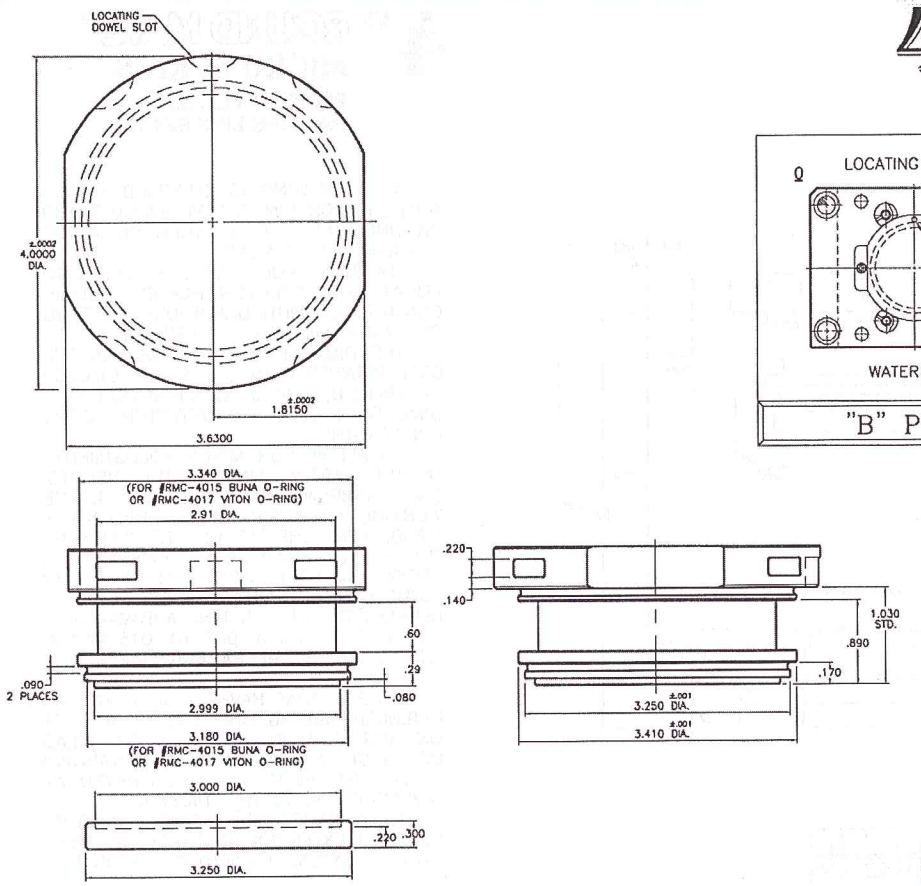

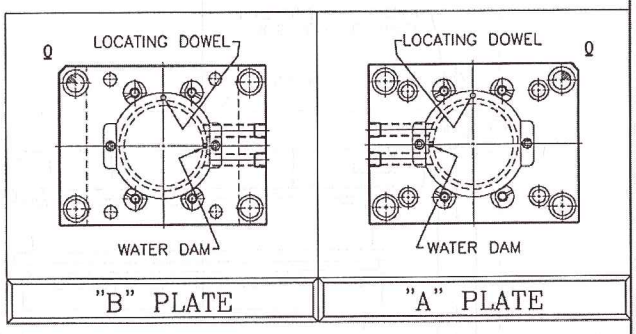

THE "A" INSERT IS THE SAME AS THE "B" INSERTS EXCEPT FOR THE WATER DAM LOCATION

TOOLMAKER IS TO INSTALL THE WATER DAM

WATER DAM IS TO LINE UP WITH WATER INLET/ OUTLET IN THE MASTER FRAME

4" ROUND MATE® MICRO SERIES

GRINDING PROCEDURES

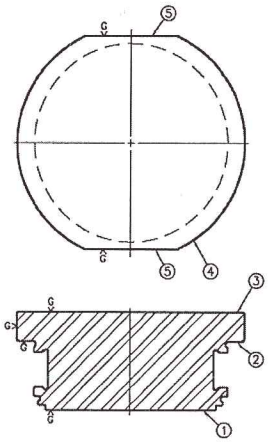

GRINDING PROCEDURES
4" ROUND MATE ®INSERT

THIS DRAWING IS SUPPLIED TO AID IN GRINDING "HEAT TREATABLE" INSERTS AFTER "HEAT TREAT"

When you receive the "Round Mate"® insert, in any heat treatable steel, it is machined to .005 /.010 oversize, per side, on all critical dimensions. Following the heat treating process, this additional stock must be removed in the following sequence:

(SEE ILLUSTRATION)

(1) Grind .004 extra stock from the bottom, or small diameter end, of the insert.

(2) Grind step, to the underside of the 4.000 diameter, to a measurement of 1.030 (+/− .0002) Approximately the same .004 will be removed.

(3) Grind the face, or parting line, of the insert to achieve an over−all thickness of 1.535 (+.005/−.004) (important note: this tolerance is compensated by springs under the return pins in the master frame. These spring will absorb up to .015 overall margin in the master frame parting line) Grinding within these tolerances places the O−rings in ideal position for a perfect seal.

(4) Grind the outside diameter of the insert head to 4.0000 (+/−.0002)

(5) The final step is grinding the flats. It is extremely important that the flats be ground in relationship to the center of the insert diameter to assure registration and the absence of a parting line mismatch on the molded part. The dimension is 3.6300 (+/−.0002) between the flats (the 3.6300 must be centered on the 4.000 diameter +/−.0002 TIR).

Note: The other outside surfaces on the insert are NOT shipped oversized, therefore , grinding will probably be unnecessary. However, we suggest you check these O.D.'s for accuracy after heat treat.

4" ROUND MATE® MICRO SERIES

PIN, SLEEVE, AND PARTING LINE SET UP

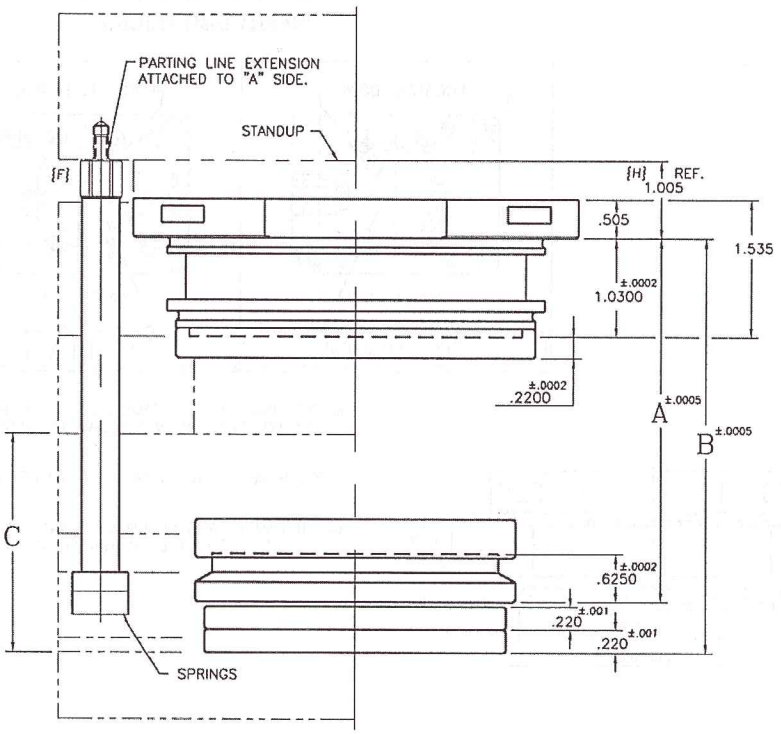

MASTER FRAME	C	A	B
MSF−0413	2.750	3.7500	4.2500

THIS DRAWING IS SUPPLIED TO AID WITH EJECTOR PIN, SLEEVE EJECTOR AND PARTING LINE SET UP WHEN DESIGNING A ROUND MATE® MOLD.

THE DIMENSION: "A" , IS SHOWN TO LOCATE THE EJECTOR PLATES, AND IN CONJUNCTION WITH DIMENSION: .6250, TO DETERMINE EJECTOR PIN LENGTHS.

THE DIMENSION: "B" , LOCATES THE CORE RETAINER PLATES, IF SLEEVE EJECTION IS UTILIZED, AND IN CONJUNCTION WITH DIMENSION: .375, TO DETERMINE CORE PIN LENGTHS.

TO ALLOW FOR MINOR ADJUSTMENTS OF THE PARTING LINE OF THE INSERTS, (i.e. SHARPEN CAVITY EDGE, ETC.), THE WORKING THICKNESS OF THE INSERTS IS 1.880, WHILE THE "A" AND "B" PLATES OF THE MASTER FRAME ARE 1.875, LEAVING APPROXIMATELY .005 PER SIDE FOR ADJUSTMENT. PLEASE NOTE SPRINGS BENEATH THE RETURN PINS AUTOMATICALLY COMPENSATE FOR A .000 TO .015 GAP IN THE MASTER FRAME PARTING LINE.

INSERTS THAT HAVE STANDUP FOR AN EXTENDED PARTING LINE, ARE TO BE KEPT ON HALF INCH INCREMENTS. THE HEAD DEPTH OF THE INSERT SHOULD MAINTAIN A .005 STAND UP AS ILLUSTRATED AT DIMENSION {H} IN THIS DRAWING.

ILLUSTRATION {F} SHOWS A RETURN PIN WITH EXTENSION IN PLACE, AS USED WITH AN EXTENDED PARTING LINE INSERT.

4" ROUND MATE® MICRO SERIES

REQUIREMENTS AND RECOMMENDATIONS

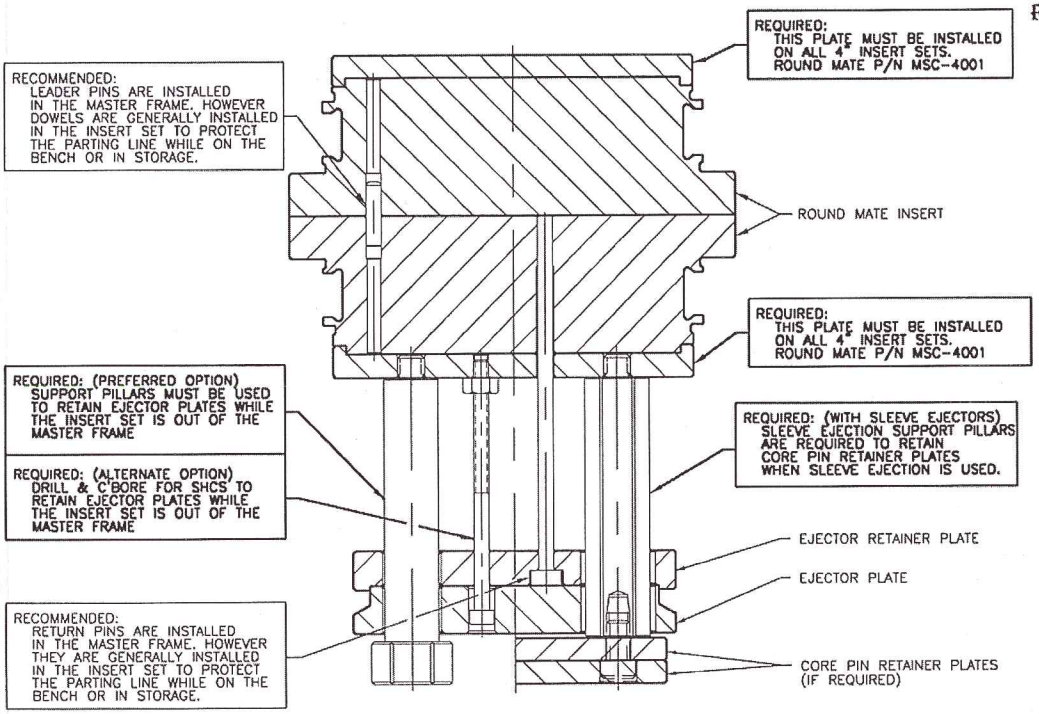

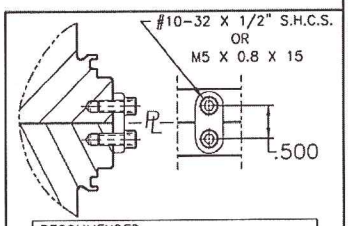

RECOMMENDED: PARTING LINE SAFETY STRAPS SHOULD BE USED WHEN THE MOLD IS OUT OF THE MASTER FRAME TO PROTECT THE PARTING LINE. ONE INCLUDED WITH EACH INSERT ROUND MATE P/N RMC-0017

4" ROUND MATE® STANDARD SERIES

INSERT DIMENSIONS

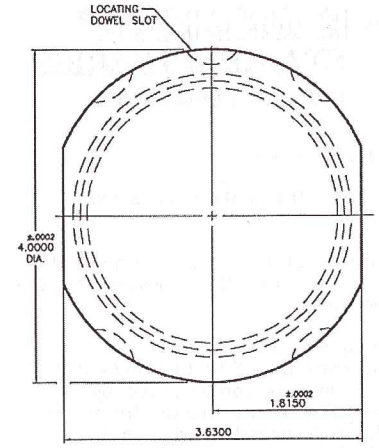

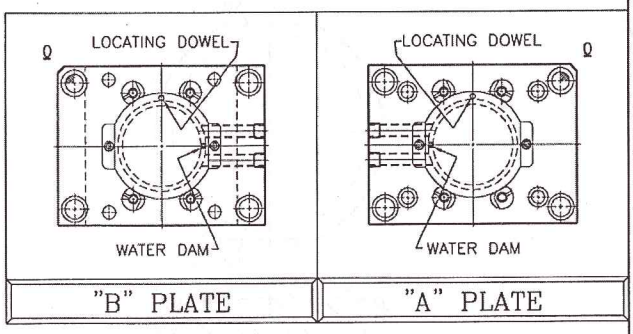

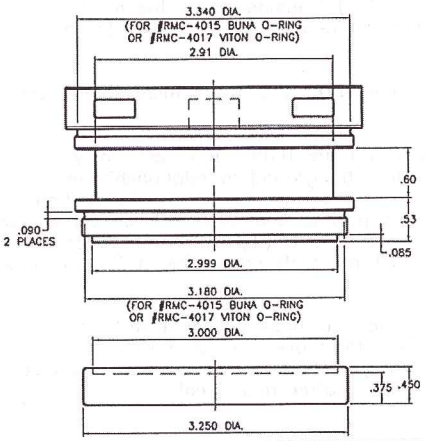

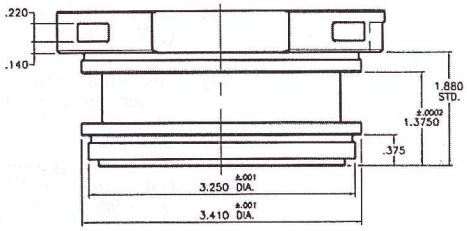

THE "A" INSERT IS THE SAME AS THE "B" INSERTS EXCEPT FOR THE WATER DAM LOCATION

TOOLMAKER IS TO INSTALL THE WATER DAM

WATER DAM IS TO LINE UP WITH WATER INLET/ OUTLET IN THE MASTER FRAME

NOTES

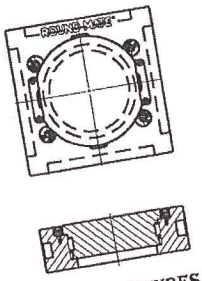

MACHINING FIXTURES ARE AVAILABLE FROM ROUND MATE. REFERENCE CATALOG PAGE #8.02

4" ROUND MATE® STANDARD SERIES

GRINDING PROCEDURES

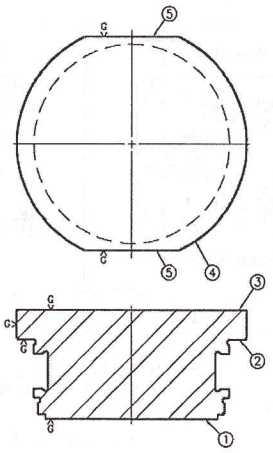

GRINDING PROCEDURES
4" ROUND MATE ®INSERT

THIS DRAWING IS SUPPLIED TO AID IN GRINDING "HEAT TREATABLE" INSERTS AFTER "HEAT TREAT"

When you receive the "Round Mate"® insert, in any heat treatable steel, it is machined to .005 /.010 oversize, per side, on all critical dimensions. Following the heat treating process, this additional stock must be removed in the following sequence:

(SEE ILLUSTRATION)

(1) Grind .004 extra stock from the bottom, or small diameter end, of the insert.

(2) Grind step, to the underside of the 4.000 diameter, to a measurement of 1.375 (+/− .0002) Approximately the same .004 will be removed.

(3) Grind the face, or parting line, of the insert to achieve an over−all thickness of 1.880 (+.005/−.004) (important note: this tolerance is compensated by springs under the return pins in the master frame. These spring will absorb up to .015 overall margin in the master frame parting line) Grinding within these tolerances places the O−rings in ideal position for a perfect seal.

(4) Grind the outside diameter of the insert head to 4.0000 (+/−.0002)

(5) The final step is grinding the flats. It is extremely important that the flats be ground in relationship to the center of the insert diameter to assure registration and the absence of a parting line mismatch on the molded part. The dimension is 3.6300 (+/−.0002) between the flats (the 3.6300 must be centered on the 4.000 diameter +/−.0002 TIR).

Note: The other outside surfaces on the insert are NOT shipped oversized, therefore , grinding will probably be unnecessary. However, we suggest you check these O.D.'s for accuracy after heat treat.

4" ROUND MATE® STANDARD SERIES

PIN, SLEEVE, AND PARTING LINE SET UP

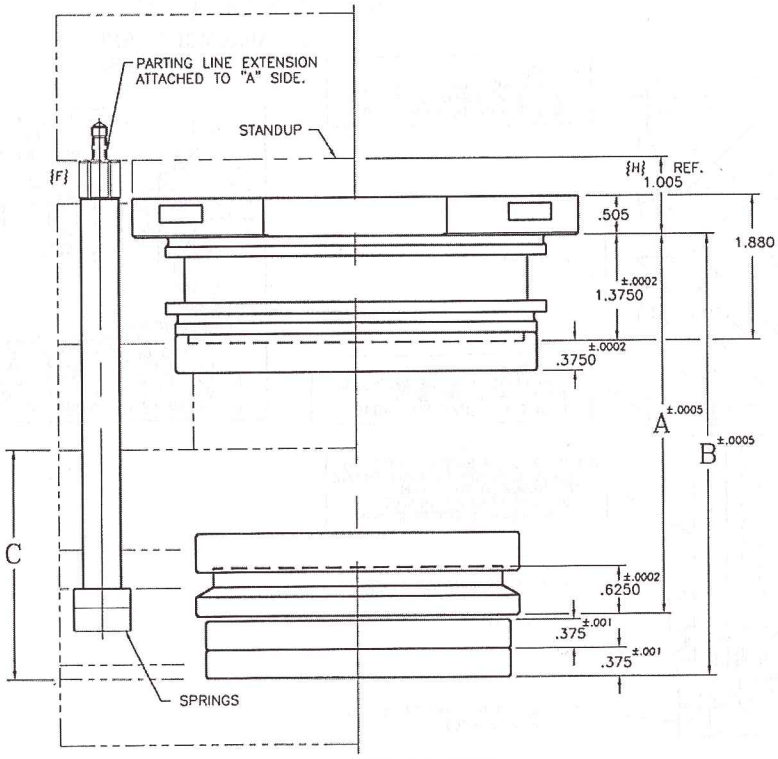

MASTER FRAME	C	A	B
RMF-0413	3.000	4.4375	5.2500

THIS DRAWING IS SUPPLIED TO AID WITH EJECTOR PIN, SLEEVE EJECTOR AND PARTING LINE SET UP WHEN DESIGNING A ROUND MATE® MOLD.

THE DIMENSION: "A" , IS SHOWN TO LOCATE THE EJECTOR PLATES, AND IN CONJUNCTION WITH DIMENSION: .6250, TO DETERMINE EJECTOR PIN LENGTHS.

THE DIMENSION: "B" , LOCATES THE CORE RETAINER PLATES, IF SLEEVE EJECTION IS UTILIZED, AND IN CONJUNCTION WITH DIMENSION: .375, TO DETERMINE CORE PIN LENGTHS.

TO ALLOW FOR MINOR ADJUSTMENTS OF THE PARTING LINE OF THE INSERTS, (i.e. SHARPEN CAVITY EDGE, ETC.), THE WORKING THICKNESS OF THE INSERTS IS 1.880, WHILE THE "A" AND "B" PLATES OF THE MASTER FRAME ARE 1.875, LEAVING APPROXIMATELY .005 PER SIDE FOR ADJUSTMENT. PLEASE NOTE SPRINGS BENEATH THE RETURN PINS AUTOMATICALLY COMPENSATE FOR A .000 TO .015 GAP IN THE MASTER FRAME PARTING LINE.

INSERTS THAT HAVE STANDUP FOR AN EXTENDED PARTING LINE, ARE TO BE KEPT ON HALF INCH INCREMENTS. THE HEAD DEPTH OF THE INSERT SHOULD MAINTAIN A .005 STAND UP AS ILLUSTRATED AT DIMENSION {H} IN THIS DRAWING.

ILLUSTRATION {F} SHOWS A RETURN PIN WITH EXTENSION IN PLACE, AS USED WITH AN EXTENDED PARTING LINE INSERT.

4" ROUND MATE® EX SERIES

PIN, SLEEVE, AND PARTING LINE SET UP

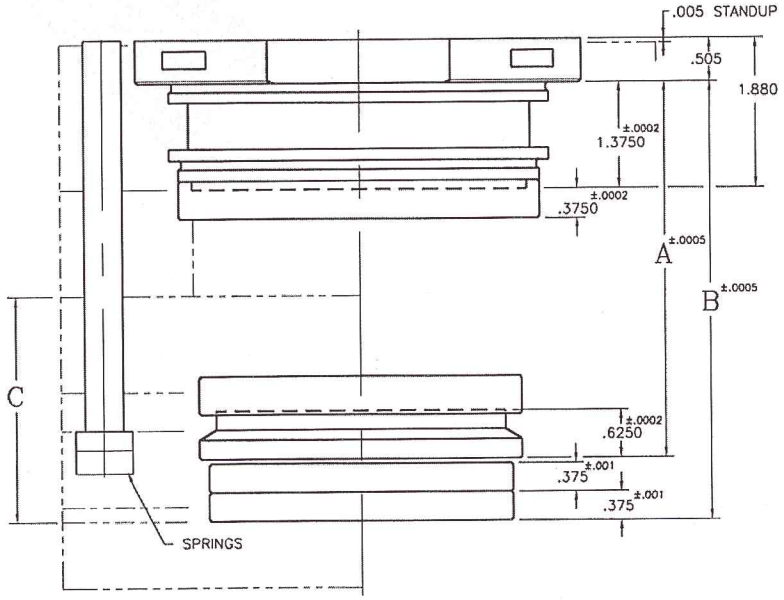

MASTER FRAME	C	A	B
RMF-0423	3.000	5.4375	6.2500

THIS DRAWING IS SUPPLIED TO AID WITH EJECTOR PIN, SLEEVE EJECTOR AND PARTING LINE SET UP WHEN DESIGNING A ROUND MATE® MOLD.

THE DIMENSION: "A" , IS SHOWN TO LOCATE THE EJECTOR PLATES, AND IN CONJUNCTION WITH DIMENSION: .6250, TO DETERMINE EJECTOR PIN LENGTHS.

THE DIMENSION: "B" , LOCATES THE CORE RETAINER PLATES, IF SLEEVE EJECTION IS UTILIZED, AND IN CONJUNCTION WITH DIMENSION: .375, TO DETERMINE CORE PIN LENGTHS.

ON MULTI POSITION MASTER FRAMES, WITH THE RUNNER RUNNING ACROSS THE FLAT OF THE INSERT FROM THE SIDE, THE .005 INSERT STANDUP ABOVE THE MOLD PLATE MUST BE HELD. RUNNER BLOCKS IN THE MASTER FRAME MUST LINE UP WITH THE PARTING LINE OF THE INSERT. THIS IS SET TO BE .005 ABOVE THE MOLD PLATE ON BOTH THE "A" AND THE "B" SIDES OF THE MASTER FRAME.

4" ROUND MATE® EX SERIES

REQUIREMENTS AND RECOMMENDATIONS

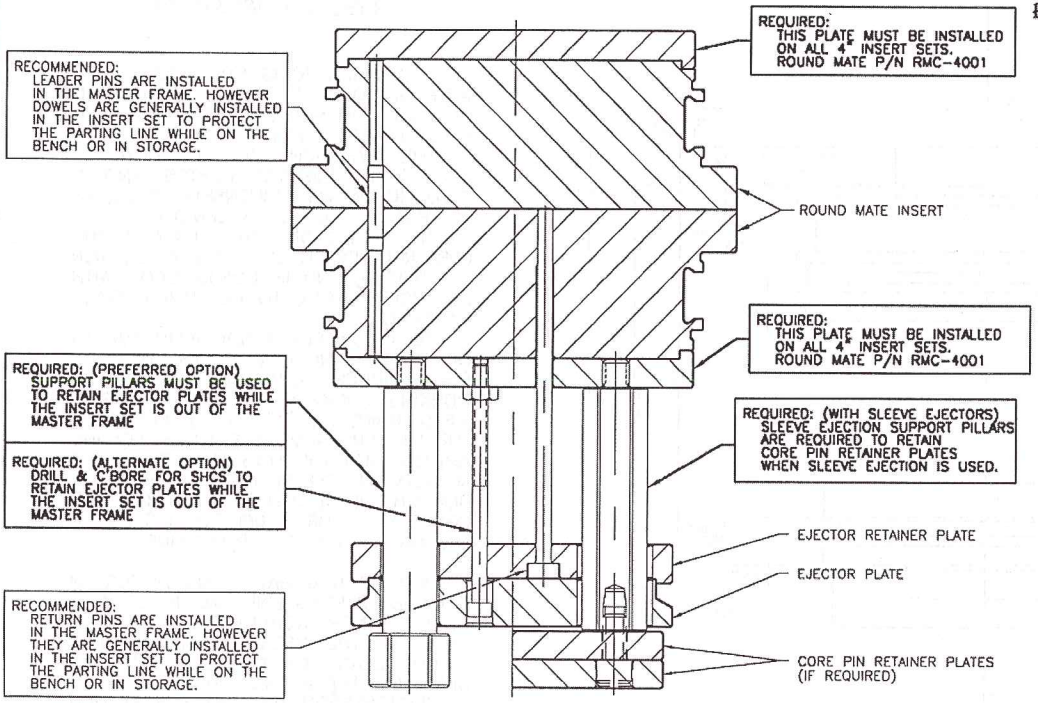

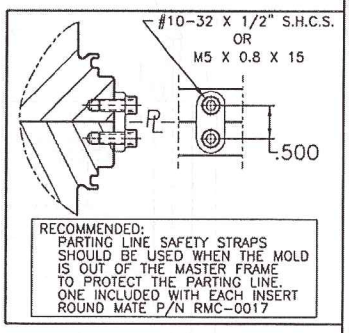

NOTES

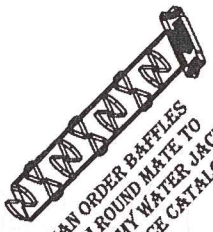

I CAN ORDER BAFFLES FROM ROUND MATE TO USE IN MY WATER JACKETS. REFERENCE CATALOG PAGE #6.03

6" ROUND MATE® STANDARD SERIES

INSERT DIMENSIONS

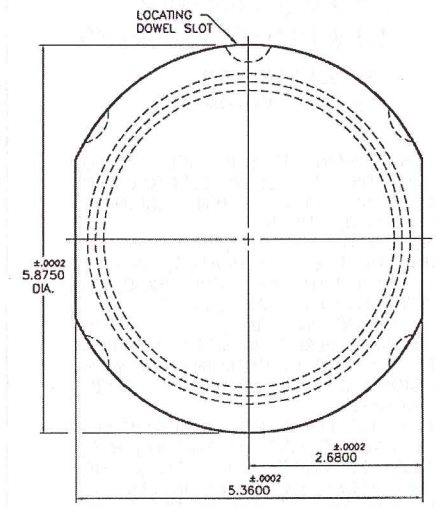

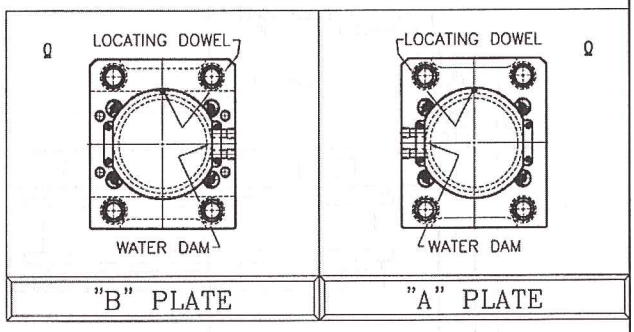

THE "A" INSERT IS THE SAME AS THE "B" INSERTS EXCEPT FOR THE WATER DAM LOCATION

TOOLMAKER IS TO INSTALL THE WATER DAM

WATER DAM IS TO LINE UP WITH WATER INLET/ OUTLET IN THE MASTER FRAME

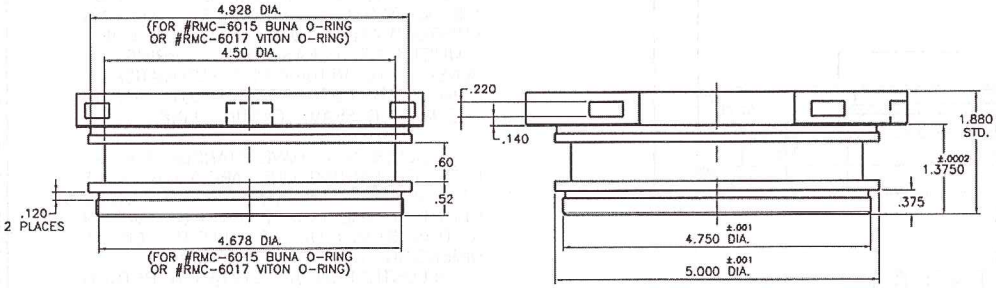

6" ROUND MATE® STANDARD SERIES

INSERT GRINDING PROCEDURES

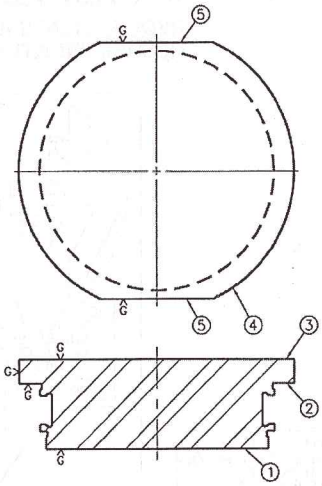

THIS DRAWING IS SUPPLIED TO AID IN GRINDING "HEAT TREATABLE" INSERTS AFTER "HEAT TREAT"

When you receive the "Round Mate"® insert, in any heat treatable steel, it is machined to .005 /.010 oversize, per side, on all critical dimensions. Following the heat treating process, this additional stock must be removed in the following sequence:

(SEE ILLUSTRATION)

(1) Grind .004 extra stock from the bottom, or small diameter end, of the insert.

(2) Grind step, to the underside of the 5.875 diameter, to a measurement of 1.375 (+/- .0002) Approximately the same .004 will be removed.

(3) Grind the face, or parting line, of the insert to achieve an over-all thickness of 1.880 (+.000/-.004) (important note: this tolerance is compensated by springs under the return pins in the master frame. These springs will absorb up to .015 overall margin in the master frame parting line) Grinding within these tolerances places the O-rings in ideal position for a perfect seal.

(4) Grind the outside diameter of the insert head to 5.8750 (+/-.0002)

(5) The final step is grinding the flats. It is extremely important that the flats be ground in relationship to the center of the insert diameter to assure registration and the absence of a parting line mismatch on the molded part. The dimension is 5.360 (+/-.0002) between the flats (the 5.360 must be centered on the 5.875 diameter +/-.0002 TIR).

Note: The other outside surfaces on the insert are NOT shipped oversized, therefore , grinding will probably be unnecessary. However, we suggest you check these O.D.'s for accuracy after heat treat.

6" ROUND MATE® STANDARD SERIES

PIN, SLEEVE, AND PARTING LINE SET UP

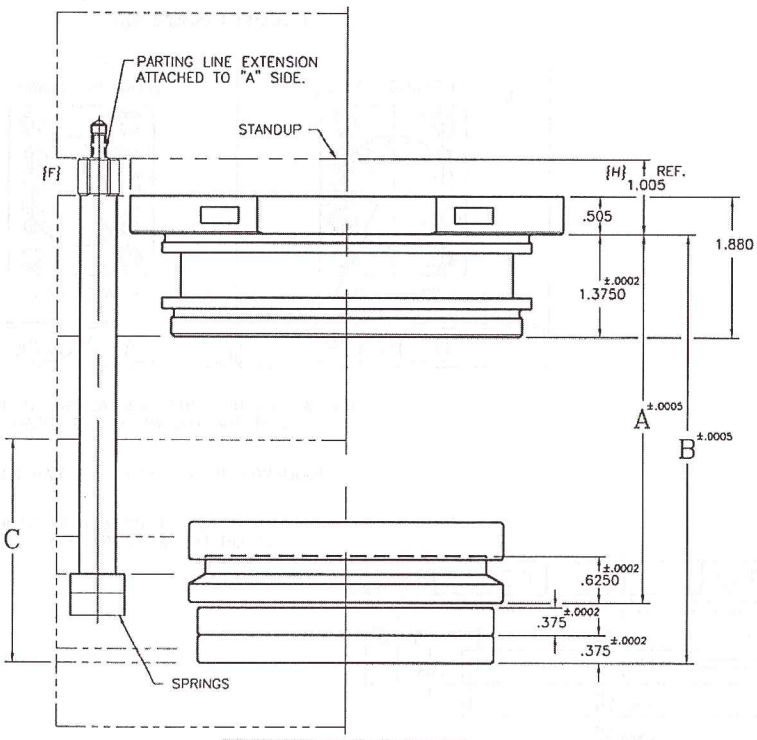

MASTER FRAME	C	A	B
RMF-0613	3.000	4.9375	5.7500
RMF-0614	4.000	5.9375	6.7500

THIS DRAWING IS SUPPLIED TO AID WITH EJECTOR PIN, SLEEVE EJECTOR AND PARTING LINE SET UP WHEN DESIGNING A ROUND MATE® MOLD.

THE DIMENSION: "A" , IS SHOWN TO LOCATE THE EJECTOR PLATES, AND IN CONJUNCTION WITH DIMENSION: .6250, TO DETERMINE EJECTOR PIN LENGTHS.

THE DIMENSION: "B" , LOCATES THE CORE RETAINER PLATES, IF SLEEVE EJECTION IS UTILIZED, AND IN CONJUNCTION WITH DIMENSION: .375, TO DETERMINE CORE PIN LENGTHS.

TO ALLOW FOR MINOR ADJUSTMENTS OF THE PARTING LINE OF THE INSERTS, (i.e. SHARPEN CAVITY EDGE, ETC.), THE WORKING THICKNESS OF THE INSERTS IS 1.880, WHILE THE "A" AND "B" PLATES OF THE MASTER FRAME ARE 1.875, LEAVING APPROXIMATELY .005 PER SIDE FOR ADJUSTMENT. PLEASE NOTE SPRINGS BENEATH THE RETURN PINS AUTOMATICALLY COMPENSATE FOR A .000 TO .015 GAP IN THE MASTER FRAME PARTING LINE.

INSERTS THAT HAVE STANDUP FOR AN EXTENDED PARTING LINE, ARE TO BE KEPT ON HALF INCH INCREMENTS. THE HEAD DEPTH OF THE INSERT SHOULD MAINTAIN A .005 STAND UP AS ILLUSTRATED AT DIMENSION {H} IN THIS DRAWING.

ILLUSTRATION {F} SHOWS A RETURN PIN WITH EXTENSION IN PLACE, AS USED WITH AN EXTENDED PARTING LINE INSERT.

6" ROUND MATE® STANDARD SERIES

REQUIREMENTS AND RECOMMENDATIONS

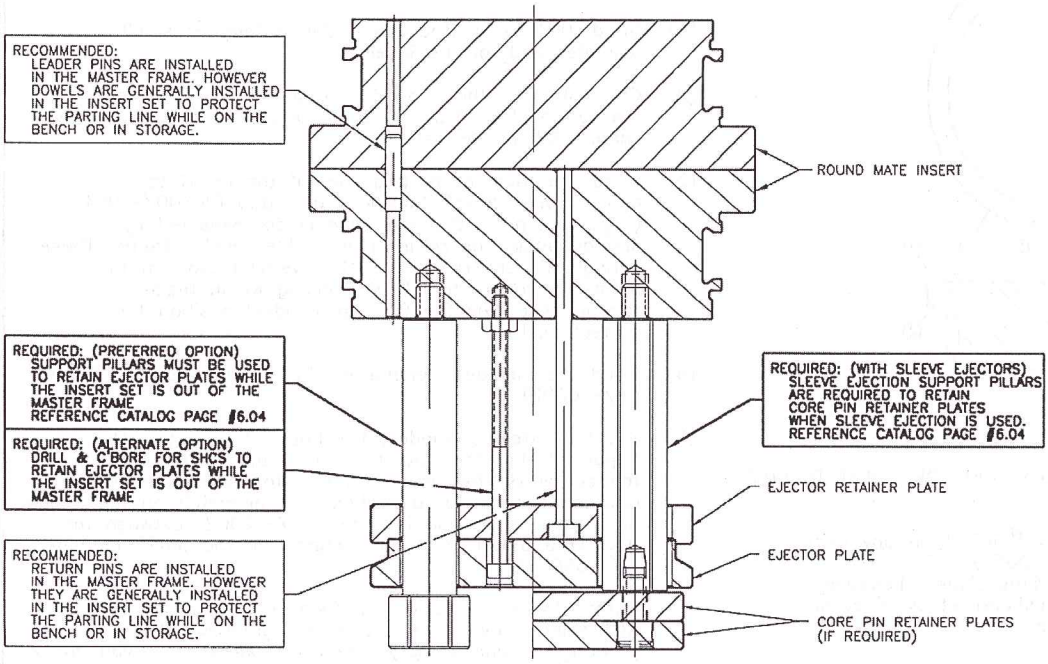

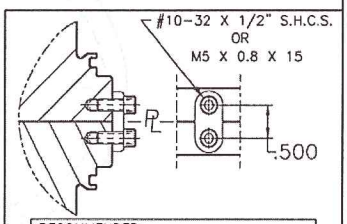

RECOMMENDED:
PARTING LINE SAFETY STRAPS SHOULD BE USED WHEN THE MOLD IS OUT OF THE MASTER FRAME TO PROTECT THE PARTING LINE. ONE INCLUDED WITH EACH INSERT ROUND MATE P/N RMC-0017

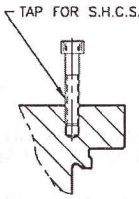

RECOMMENDED:
TAPPED HOLES CAN BE ADDED TO THE PARTING LINE OF THE INSERT SET. A BOLT CAN THEN BE USED AS A HANDLE TO LOAD THE INSERT SET INTO THE MASTER FRAME.

6" ROUND MATE® EX SERIES

PIN, SLEEVE, AND PARTING LINE SET UP

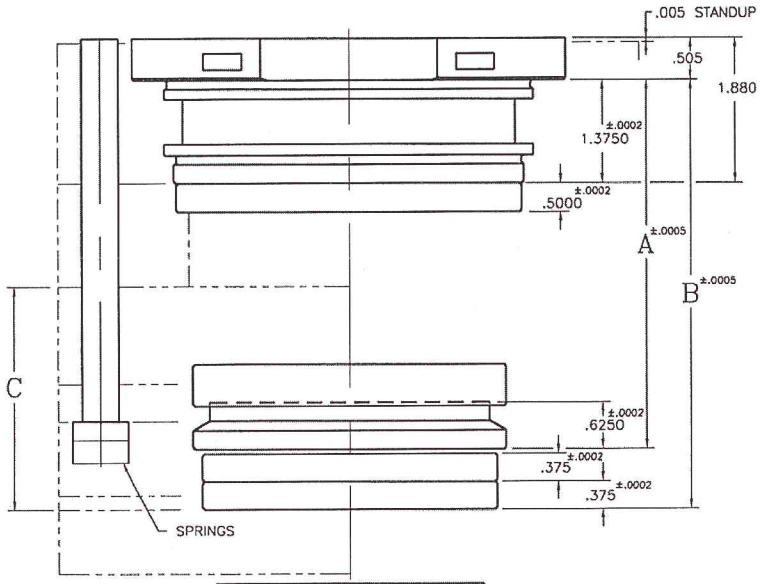

MASTER FRAME	C	A	B
RMF-0623	3.000	4.9375	5.7500
RMF-0624	4.000	5.9375	6.7500
RMF-0625	5.000	6.9375	7.7500

THIS DRAWING IS SUPPLIED TO AID WITH EJECTOR PIN, SLEEVE EJECTOR AND PARTING LINE SET UP WHEN DESIGNING A ROUND MATE® MOLD.

THE DIMENSION: "A" , IS SHOWN TO LOCATE THE EJECTOR PLATES, AND IN CONJUNCTION WITH DIMENSION: .6250, TO DETERMINE EJECTOR PIN LENGTHS.

THE DIMENSION: "B" , LOCATES THE CORE RETAINER PLATES, IF SLEEVE EJECTION IS UTILIZED, AND IN CONJUNCTION WITH DIMENSION: .375, TO DETERMINE CORE PIN LENGTHS.

ON MULTI POSITION MASTER FRAMES, WITH THE RUNNER RUNNING ACROSS THE FLAT OF THE INSERT FROM THE SIDE, THE .005 INSERT STANDUP ABOVE THE MOLD PLATE MUST BE HELD. RUNNER BLOCKS IN THE MASTER FRAME MUST LINE UP WITH THE PARTING LINE OF THE INSERT. THIS IS SET TO BE .005 ABOVE THE MOLD PLATE ON BOTH THE "A" AND THE "B" SIDES OF THE MASTER FRAME.

6" ROUND MATE® EX SERIES

REQUIREMENTS AND RECOMMENDATIONS

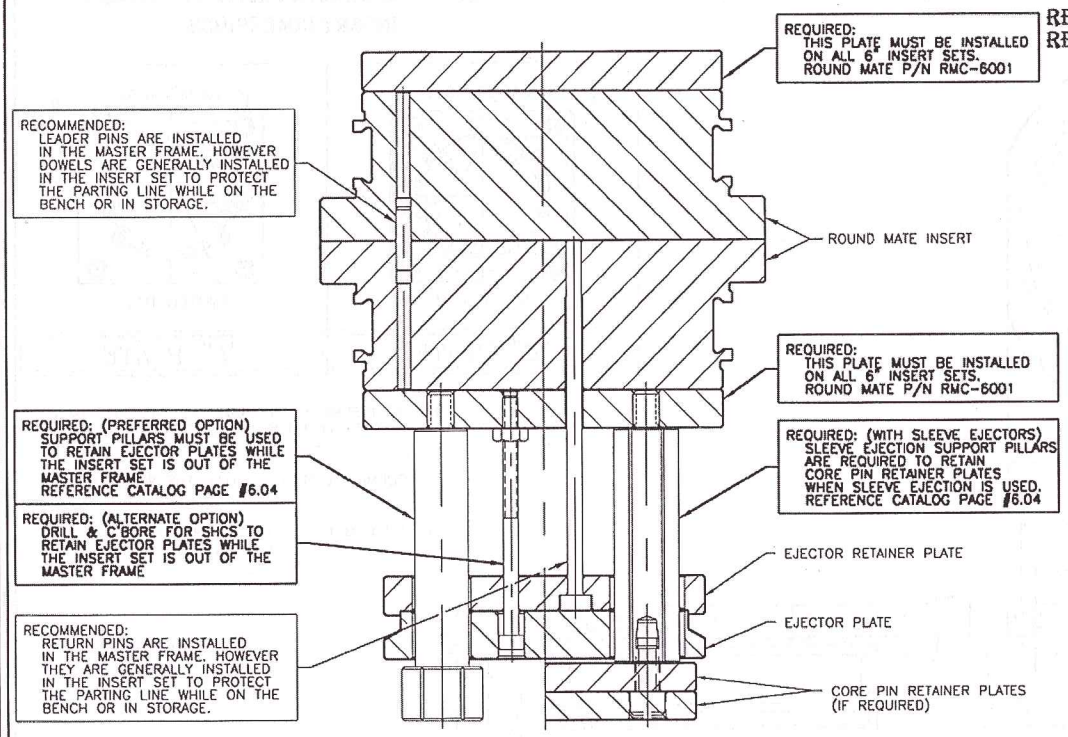

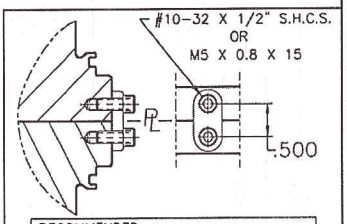

RECOMMENDED: PARTING LINE SAFETY STRAPS SHOULD BE USED WHEN THE MOLD IS OUT OF THE MASTER FRAME TO PROTECT THE PARTING LINE. ONE INCLUDED WITH EACH INSERT ROUND MATE P/N RMC-0017

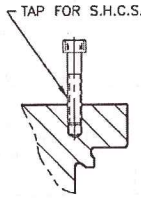

RECOMMENDED: TAPPED HOLES CAN BE ADDED TO THE PARTING LINE OF THE INSERT SET. A BOLT CAN THEN BE USED AS A HANDLE TO LOAD THE INSERT SET INTO THE MASTER FRAME.

NOTES

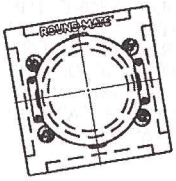

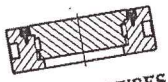

MACHINING FIXTURES ARE AVAILABLE FROM ROUND MATE. REFERENCE CATALOG PAGE #8.02

8" ROUND MATE® STANDARD SERIES

INSERT DIMENSIONS

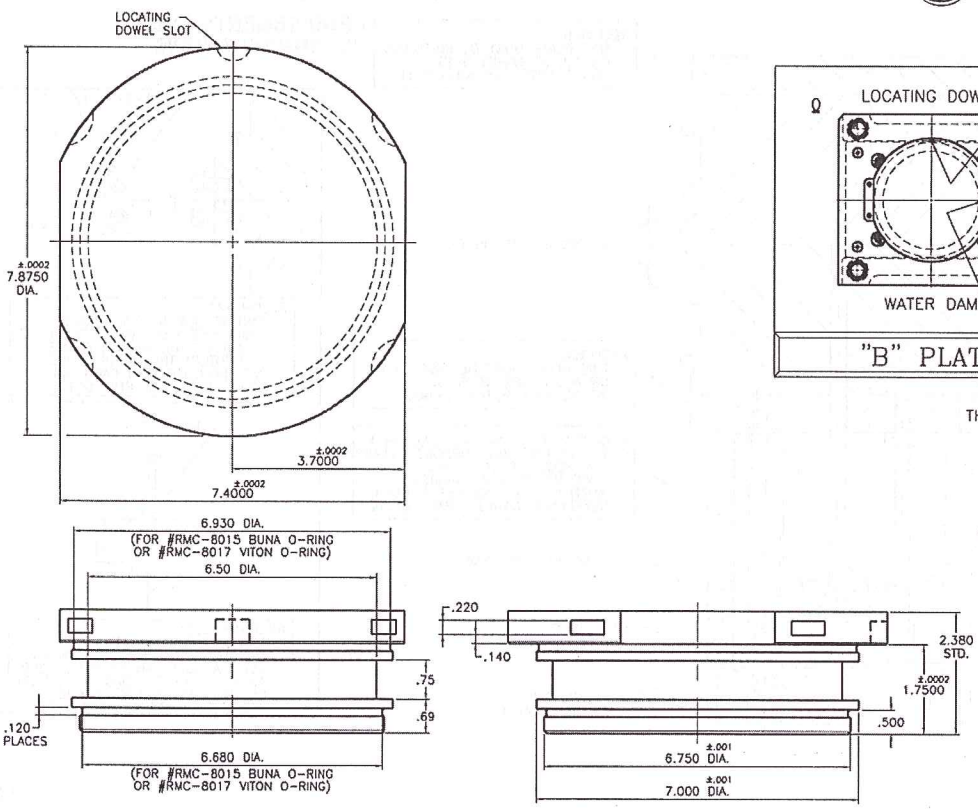

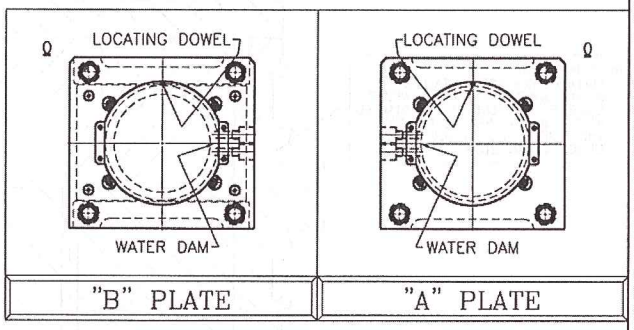

THE "A" INSERT IS THE SAME AS THE "B" INSERTS EXCEPT FOR THE WATER DAM LOCATION

TOOLMAKER IS TO INSTALL THE WATER DAM

WATER DAM IS TO LINE UP WITH WATER INLET/ OUTLET IN THE MASTER FRAME

8" ROUND MATE® STANDARD SERIES

GRINDING PROCEDURES

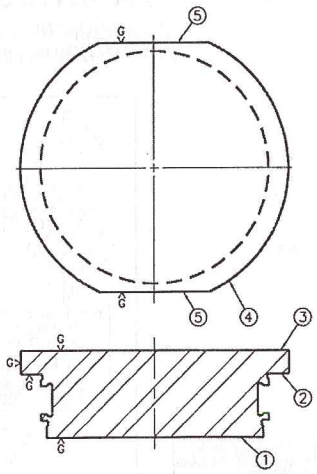

THIS DRAWING IS SUPPLIED TO AID IN GRINDING "HEAT TREATABLE" INSERTS AFTER "HEAT TREAT"

When you receive the "Round Mate"® insert, in any heat treatable steel, it is machined to .005 /.010 oversize, per side, on all critical dimensions. Following the heat treating process, this additional stock must be removed in the following sequence:

(SEE ILLUSTRATION)

(1) Grind .004 extra stock from the bottom, or small diameter end, of the insert.

(2) Grind step, to the underside of the 7.875 diameter, to a measurement of 1.750 (+/- .0002) Approximately the same .004 will be removed.

(3) Grind the face, or parting line, of the insert to achieve an over-all thickness of 2.380 (+0.000/-.004) (important note: this tolerance is compensated by springs under the return pins in the master frame. These springs will absorb up to .015 overall margin in the master frame parting line) Grinding within these tolerances places the O-rings in ideal position for a perfect seal.

(4) Grind the outside diameter of the insert head to 7.8750 (+/-.0002)

(5) The final step is grinding the flats. It is extremely important that the flats be ground in relationship to the center of the insert diameter to assure registration and the absence of a parting line mismatch on the molded part. The dimension is 7.400 (+/-.0002) between the flats (the 7.400 must be centered on the 7.875 diameter +/-.0002 TIR).

Note: The other outside surfaces on the insert are NOT shipped oversized, therefore , grinding will probably be unnecessary. However, we suggest you check these O.D.'s for accuracy, after heat treat.

8" ROUND MATE® STANDARD SERIES

PIN, SLEEVE, AND PARTING LINE SET UP

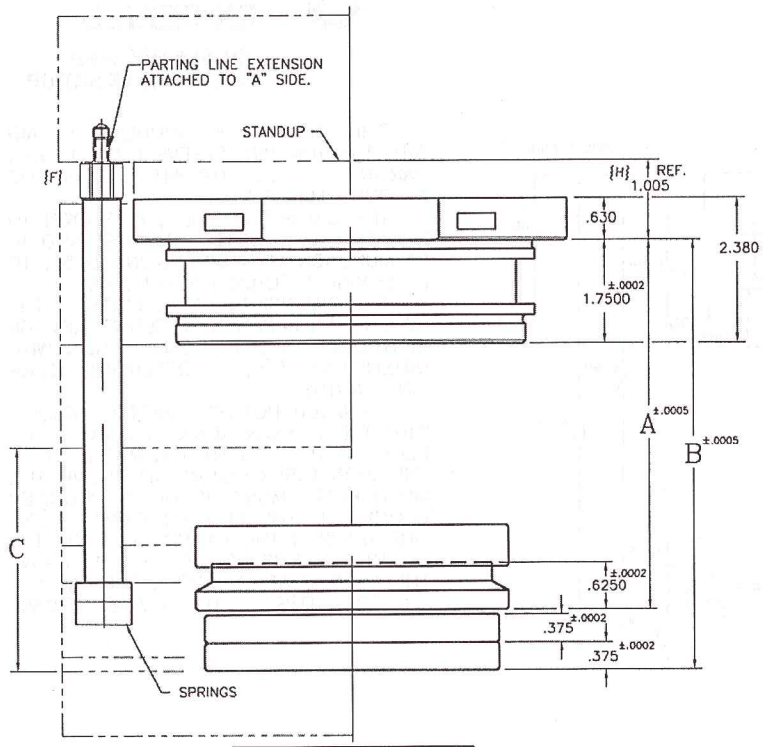

MASTER FRAME	C	A	B
RMF-0813	3.000	5.3125	6.1250
RMF-0814	4.000	7.3125	8.1250
RMF-0815	5.000	8.3125	9.1250

THIS DRAWING IS SUPPLIED TO AID WITH EJECTOR PIN, SLEEVE EJECTOR AND PARTING LINE SET UP WHEN DESIGNING A ROUND MATE® MOLD.

THE DIMENSION: "A" , IS SHOWN TO LOCATE THE EJECTOR PLATES, AND IN CONJUNCTION WITH DIMENSION: .6250, TO DETERMINE EJECTOR PIN LENGTHS.

THE DIMENSION: "B" , LOCATES THE CORE RETAINER PLATES, IF SLEEVE EJECTION IS UTILIZED, AND IN CONJUNCTION WITH DIMENSION: .375, TO DETERMINE CORE PIN LENGTHS.

TO ALLOW FOR MINOR ADJUSTMENTS OF THE PARTING LINE OF THE INSERTS, (i.e. SHARPEN CAVITY EDGE, ETC.), THE WORKING THICKNESS OF THE INSERTS IS 1.880, WHILE THE "A" AND "B" PLATES OF THE MASTER FRAME ARE 2.375, LEAVING APPROXIMATELY .005 PER SIDE FOR ADJUSTMENT. PLEASE NOTE SPRINGS BENEATH THE RETURN PINS AUTOMATICALLY COMPENSATE FOR A .000 TO .015 GAP IN THE MASTER FRAME PARTING LINE.

INSERTS THAT HAVE STANDUP FOR AN EXTENDED PARTING LINE, ARE TO BE KEPT ON HALF INCH INCREMENTS. THE HEAD DEPTH OF THE INSERT SHOULD MAINTAIN A .005 STAND UP AS ILLUSTRATED AT DIMENSION {H} IN THIS DRAWING.

ILLUSTRATION {F} SHOWS A RETURN PIN WITH EXTENSION IN PLACE, AS USED WITH AN EXTENDED PARTING LINE INSERT.

8" ROUND MATE® STANDARD SERIES

REQUIREMENTS AND RECOMMENDATIONS

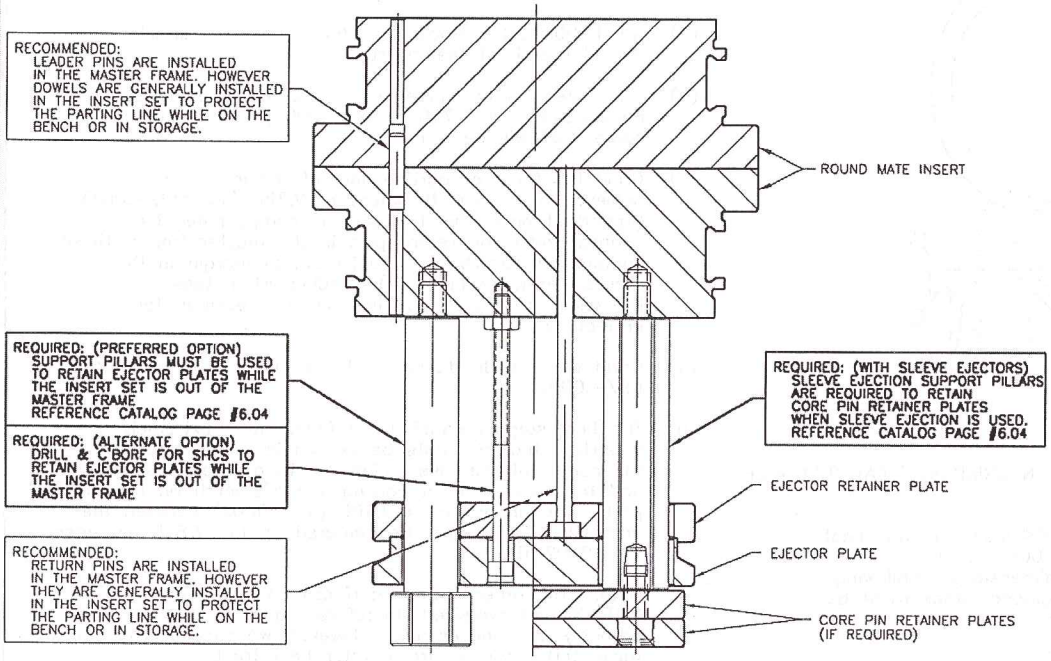

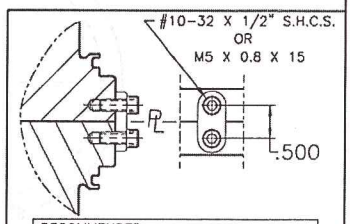

RECOMMENDED:
PARTING LINE SAFETY STRAPS SHOULD BE USED WHEN THE MOLD IS OUT OF THE MASTER FRAME TO PROTECT THE PARTING LINE. ONE INCLUDED WITH EACH INSERT ROUND MATE P/N RMC-0017

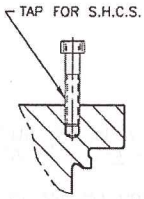

RECOMMENDED:
TAPPED HOLES CAN BE ADDED TO THE PARTING LINE OF THE INSERT SET. A BOLT CAN THEN BE USED AS A HANDLE TO LOAD THE INSERT SET INTO THE MASTER FRAME.

8" ROUND MATE® EX SERIES

PIN, SLEEVE, AND PARTING LINE SET UP

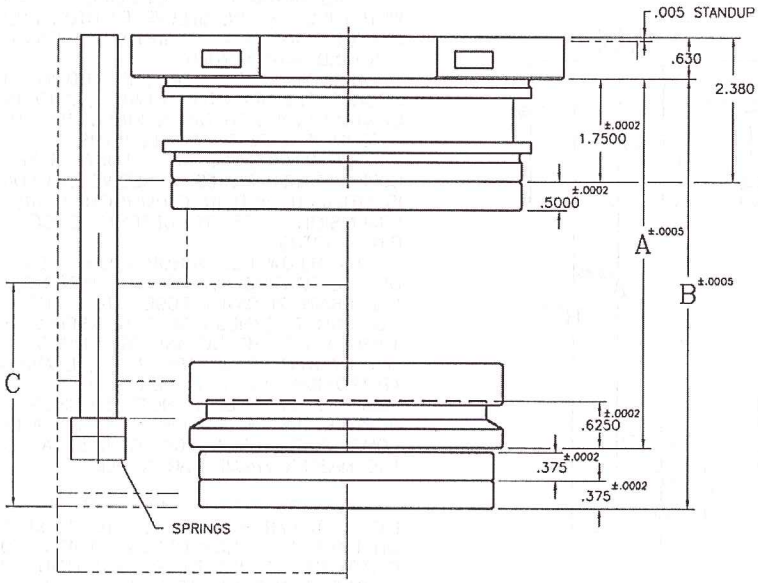

MASTER FRAME	C	A	B
RMF-0823	3.000	6.3125	7.1250
RMF-0824	4.000	7.3125	8.1250
RMF-0825	5.000	8.3125	9.1250

THIS DRAWING IS SUPPLIED TO AID WITH EJECTOR PIN, SLEEVE EJECTOR AND PARTING LINE SET UP WHEN DESIGNING A ROUND MATE® MOLD.

THE DIMENSION: "A", IS SHOWN TO LOCATE THE EJECTOR PLATES, AND IN CONJUNCTION WITH DIMENSION: .6250, TO DETERMINE EJECTOR PIN LENGTHS.

THE DIMENSION: "B", LOCATES THE CORE RETAINER PLATES, IF SLEEVE EJECTION IS UTILIZED, AND IN CONJUNCTION WITH DIMENSION: .375, TO DETERMINE CORE PIN LENGTHS.

ON MULTI POSITION MASTER FRAMES, WITH THE RUNNER RUNNING ACROSS THE FLAT OF THE INSERT FROM THE SIDE, THE .005 INSERT STANDUP ABOVE THE MOLD PLATE MUST BE HELD. RUNNER BLOCKS IN THE MASTER FRAME MUST LINE UP WITH THE PARTING LINE OF THE INSERT. THIS IS SET TO BE .005 ABOVE THE MOLD PLATE ON BOTH THE "A" AND THE "B" SIDES OF THE MASTER FRAME.

8" ROUND MATE® EX SERIES

REQUIREMENTS AND RECOMMENDATIONS

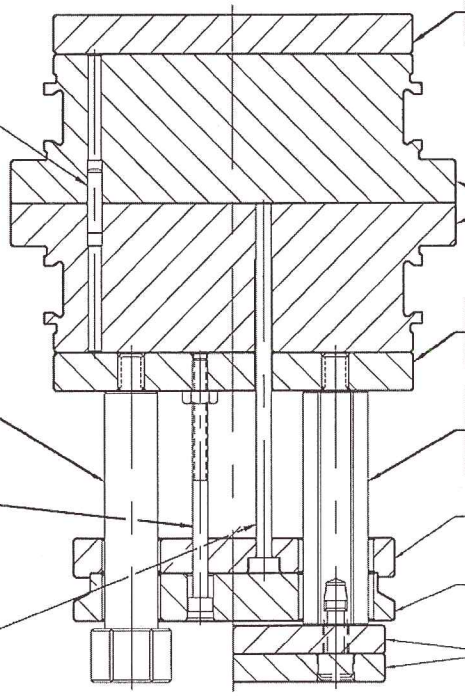

REQUIRED:
THIS PLATE MUST BE INSTALLED ON ALL 6" INSERT SETS.
ROUND MATE P/N RMC-6001

RECOMMENDED:
LEADER PINS ARE INSTALLED IN THE MASTER FRAME. HOWEVER DOWELS ARE GENERALLY INSTALLED IN THE INSERT SET TO PROTECT THE PARTING LINE WHILE ON THE BENCH OR IN STORAGE.

ROUND MATE INSERT

REQUIRED:
THIS PLATE MUST BE INSTALLED ON ALL 6" INSERT SETS.
ROUND MATE P/N RMC-6001

REQUIRED: (PREFERRED OPTION)
SUPPORT PILLARS MUST BE USED TO RETAIN EJECTOR PLATES WHILE THE INSERT SET IS OUT OF THE MASTER FRAME
REFERENCE CATALOG PAGE #6.04

REQUIRED: (ALTERNATE OPTION)
DRILL & C'BORE FOR SHCS TO RETAIN EJECTOR PLATES WHILE THE INSERT SET IS OUT OF THE MASTER FRAME

REQUIRED: (WITH SLEEVE EJECTORS)
SLEEVE EJECTION SUPPORT PILLARS ARE REQUIRED TO RETAIN CORE PIN RETAINER PLATES WHEN SLEEVE EJECTION IS USED.
REFERENCE CATALOG PAGE #6.04

EJECTOR RETAINER PLATE

EJECTOR PLATE

RECOMMENDED:
RETURN PINS ARE INSTALLED IN THE MASTER FRAME. HOWEVER THEY ARE GENERALLY INSTALLED IN THE INSERT SET TO PROTECT THE PARTING LINE WHILE ON THE BENCH OR IN STORAGE.

CORE PIN RETAINER PLATES (IF REQUIRED)

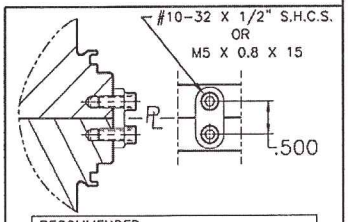

RECOMMENDED:
PARTING LINE SAFETY STRAPS SHOULD BE USED WHEN THE MOLD IS OUT OF THE MASTER FRAME TO PROTECT THE PARTING LINE. ONE INCLUDED WITH EACH INSERT ROUND MATE P/N RMC-0017

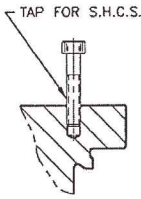

RECOMMENDED:
TAPPED HOLES CAN BE ADDED TO THE PARTING LINE OF THE INSERT SET. A BOLT CAN THEN BE USED AS A HANDLE TO LOAD THE INSERT SET INTO THE MASTER FRAME.