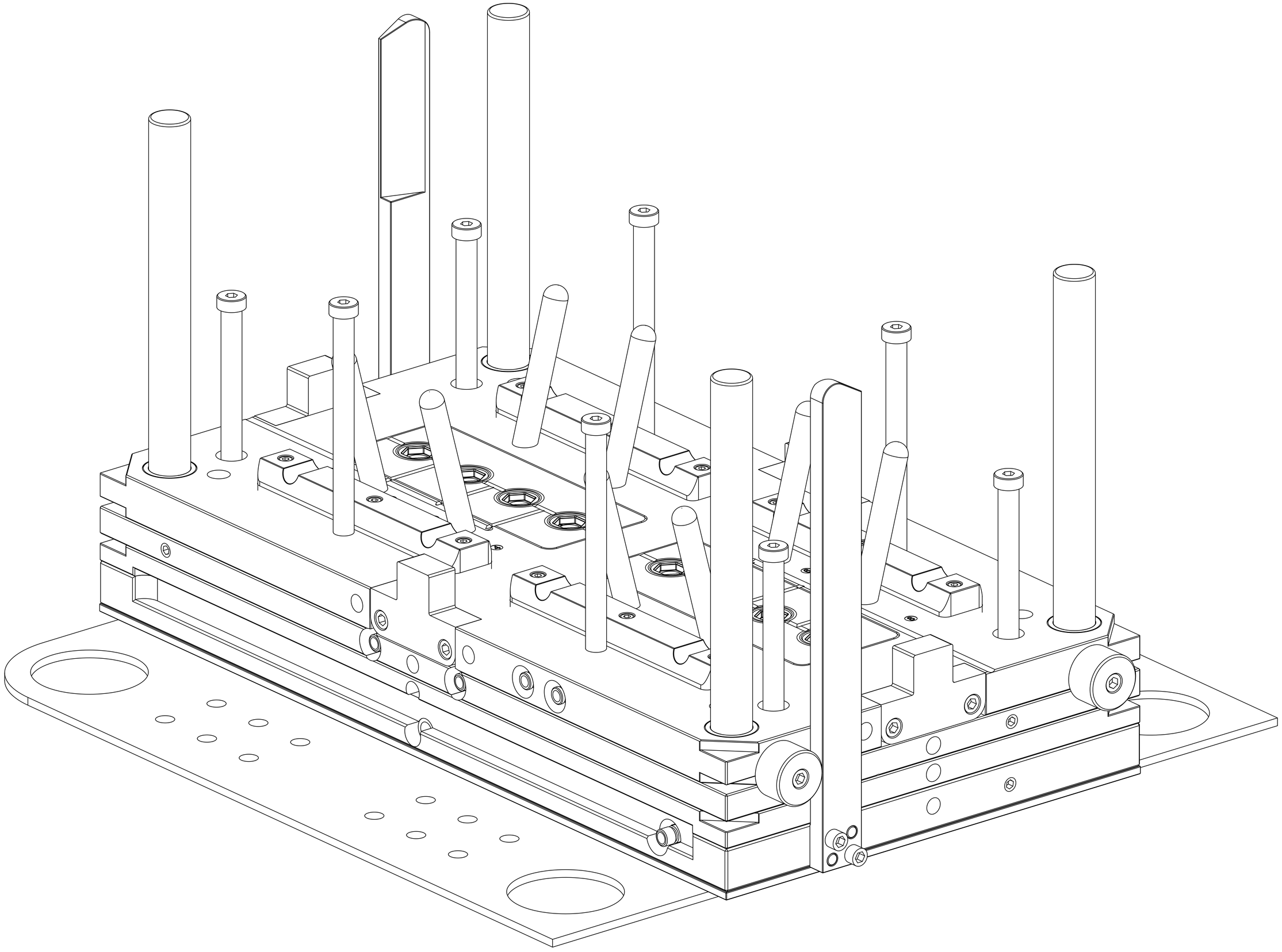

Unless stamped "File Copy" in red, this is an Uncontrolled Document

REV G-1

| | | | |
|---|---|---|---|
| DRAWN TRJ | APPR. | UFE Incorporated | |
| DATE 12-21-07 | DATE | UNITED FOR EXCELLENCE | STILLWATER, MN |
| TOLERANCE UNLESS OTHERWISE SPECIFIED | UFE J.N. 61747 | TITLE MOLD LAYOUT ISO STA. HALF | |
| FRACTIONAL ±1/32 | CUSTOMER UFE | | |
| 2 PLC.DEC. ±.010 | PART NO. 137304 | | |
| 3 PLC.DEC. ±.005 | | SCALE 1 : 1 | FILE NAME: 61747-dft.prt |
| 4 PLC.DEC. ±.0004 | | | LAYER: ALL |
| ANGULAR ±1 0°00' | PART NAME CARTRIDGE NUT | SHEET 9 | DRAWING: SHG-MLO |

| LEVEL | ECN | BY | DATE | CHKD | REVISION |
|---|---|---|---|---|---|